DATE	REV	ECN	APP'D. BY
3-16-16	A5	10618	TRM
7-6-16	B0	10713	TRM
2-05-18	B1	11192	DHG
4-10-19	C0	11365	ADB
7-12-23	D0	12208	JE

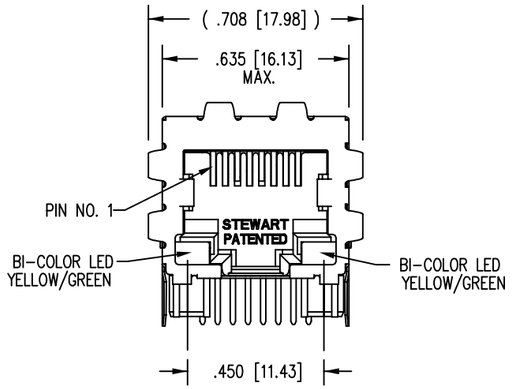

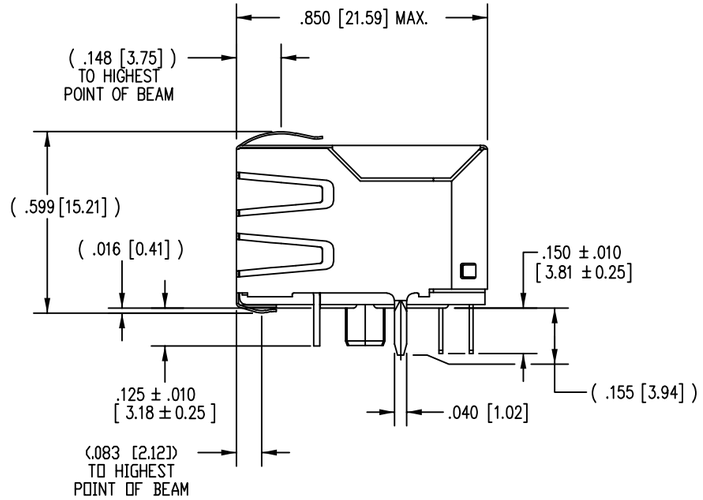

LED POLARITY

(ENLARGED VIEW)

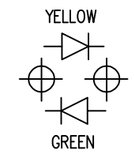

LED SPECIFICATIONS				
LOW CURRENT BI-COLOR LED		WAVE LENGTH	FORWARD V (MAX)	*(TYP)
YELLOW/GREEN	YELLOW	590 nm	2.5 V	2.1 V
	GREEN	565 nm	2.5 V	2.2 V

* WITH A FORWARD CURRENT OF 20mA (TYP)

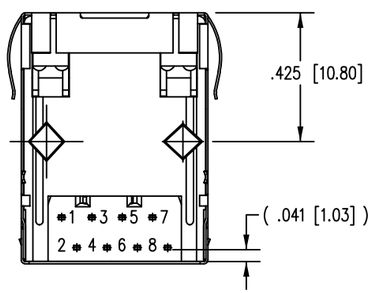

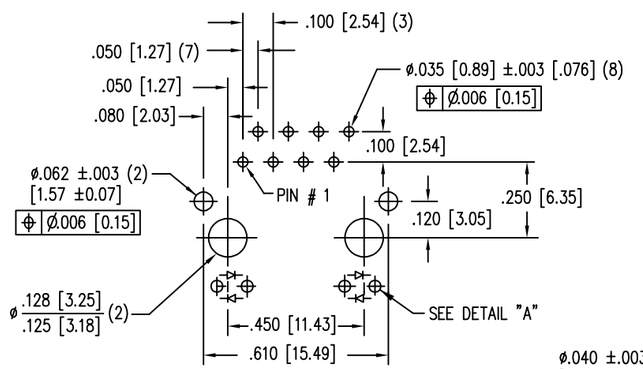

P.C.B. RECOMMENDED HOLE LAYOUT
SEEN FROM COMPONENT SIDE

ALL CENTERLINE DIMENSIONS ARE BASIC.

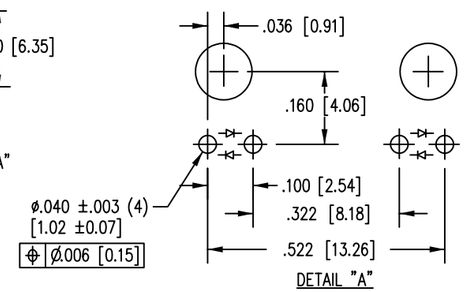

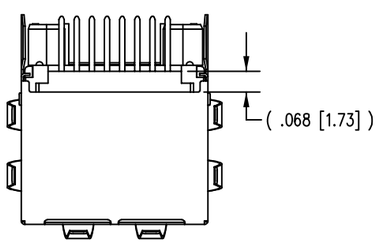

NOTES:
1. CONNECTOR MATERIALS:
   HOUSING: THERMOPLASTIC UL94 V-0
   CONTACT/SHIELD: COPPER ALLOY
   SHIELD PLATING: NICKEL OR "REFLOW" TIN
   CONTACT PLATING: SELECTIVE GOLD OR EQUIVALENT IN THE CONTACT AREA SEE CHART FOR PART NUMBER
2. DESIGNED FOR CATEGORY 5/5e APPLICATIONS.
3. IR REFLOW COMPATIBLE AT 260° C.
4. DIMENSIONS AND TOLERANCES COMPLY WITH TIA-1096 STANDARD.
5. FOR PRODUCT SPECIFICATIONS SEE PR022-01.
6. THE SUGGESTED PANEL OPENING IS INTENDED TO GIVE USER THE ABILITY TO HAVE REASONABLE JACK/PANEL CLEARANCES, YET MAINTAIN GROUNDING CAPABILITY. THESE VARIABLES CAN BE ADJUSTED IN EITHER DIRECTION BUT MAY CARRY SOME CONSEQUENCES IN THE FORM OF LOWER MATING FORCES OR TIGHTER ASSEMBLY TOLERANCES.
7. DIELECTRIC WITHSTANDING VOLTAGE (CONTACT TO SHIELD): 2250 DVC

50 MICRO-INCHES [1.27um]	SS74800-105F	
50 MICRO-INCHES [1.27um]	SS74800-103F	PACKAGED ON TAPE & REEL
CONTACT PLATING IN MATING AREA	PART NUMBER	

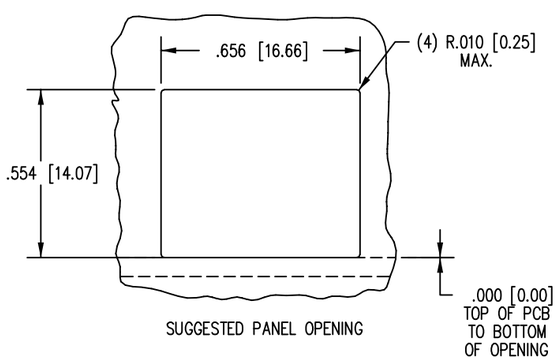

SUGGESTED PANEL OPENING

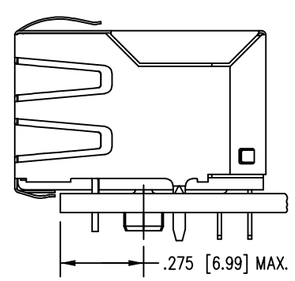

RoHS

THIRD ANGLE PROJECTION

DO NOT SCALE DRAWING
DRAWING IS SUBJECT TO CHANGE WITHOUT NOTICE
DIMENSIONS: INCHES [METRIC]
UNLESS OTHERWISE SPECIFIED TOLERANCES ARE ±.005 [0.13] ANGLES ARE ± 1°
SHEET NO. 1 OF 2

stewart CONNECTOR a bel group
11118 Susquehanna Trail South
Glen Rock, PA 17327-9199
(717) 235-7512
http://www.stewartconnector.com

TITLE: EMI-RFI ONE PIECE SHIELDED SINGLE PORT CAT 5 LED JACK, .150" LEADS, DIAMOND POSTS

THIS DRAWING AND THE SUBJECT MATTER SHOWN THEREON ARE CONFIDENTIAL AND THE PROPRIETARY PROPERTY OF STEWART CONNECTOR AND SHALL NOT BE REPRODUCED, COPIED, OR USED IN ANY MANNER WITHOUT PRIOR WRITTEN CONSENT OF STEWART CONNECTOR. ONE OR MORE U.S. PATENTS MAY APPLY TO THIS PRODUCT. FOR DETAILS, PLEASE VISIT: HTTP://BELFUSE.COM/STEWART/STEWART_PATENTS/

DRN BY:	TRM	DATE	3-9-11
APPD BY:	DHG	DATE	3-10-11
DWG NO.	CT740197F	REV.	D0

AutoCAD

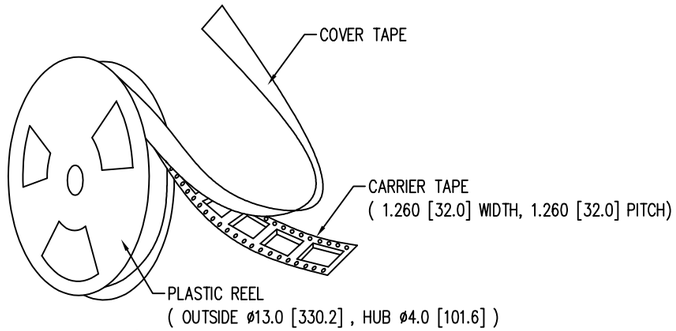

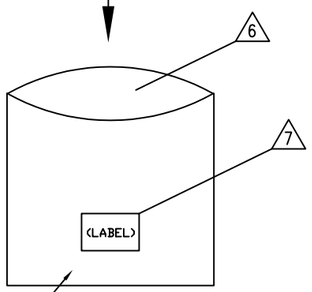

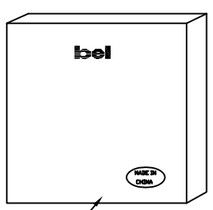

PIZZA BOX
(13.38 [339.9] L X 13.58 [344.9] W X 2.12 [53.85] H)

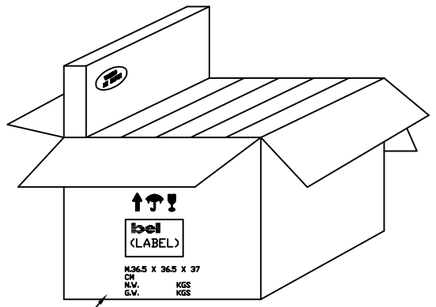

CARTON BOX
(14.25 [361.9] L X 14.125 [358.8] W X 14.25 [361.9] H)

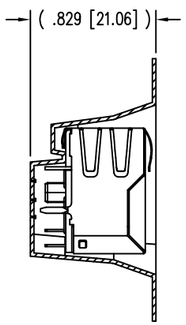

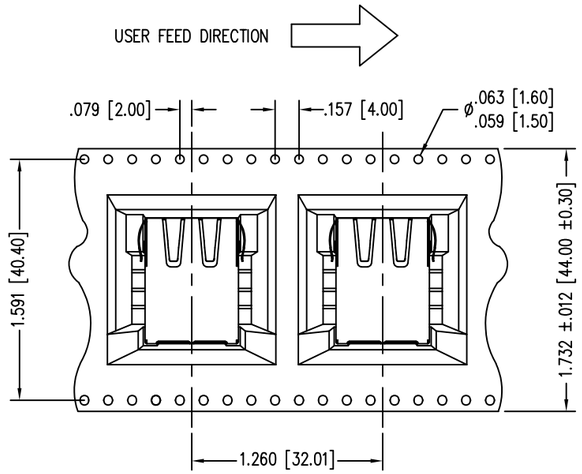

PART ORIENTATION & FEEDING DIRECTION.
PART SS74800-103F ONLY

NOTES:

1. LEAVE 48 INCHES COVER TAPE AND 5 EMPTY POCKETS AT TRAILER.
2. LEAVE 24 INCHES COVER TAPE AND 13 EMPTY POCKETS AT LEADER.
3. PACK 93 PIECES PER REEL.
4. EACH PIZZA BOX CONTAINS ONE (1) REEL.
   (93 PARTS IN EACH PIZZA BOX)
5. EACH CARTON BOX CONTAINS SIX (6) PIZZA BOXES.
   (558 PARTS IN EACH CARTON BOX)

6. EACH REEL IS PACKED IN A HEAT SEALED MOISTURE BARRIER BAG ALONG WITH DESICCANT AND MOISTURE INDICATOR CARD.

7. ALL LABELS TO INCLUDE:

-P/N

-QTY

-REV

-MSL 3

-MANUFACTURING DATE

RoHS

THIRD ANGLE PROJECTION	stewart CONNECTOR a bel group	11118 Susquehanna Trail South Glen Rock, PA 17327-9199 (717) 235-7512 http://www.stewartconnector.com	
DO NOT SCALE DRAWING DRAWING IS SUBJECT TO CHANGE WITHOUT NOTICE	TITLE: EMI-RFI ONE PIECE SHIELDED SINGLE PORT CAT 5 LED JACK, .150" LEADS, DIAMOND POSTS		
DIMENSIONS: INCHES [METRIC] UNLESS OTHERWISE SPECIFIED TOLERANCES ARE ±.005 [0.13] ANGLES ARE ± 1°	THIS DRAWING AND THE SUBJECT MATTER SHOWN THEREON ARE CONFIDENTIAL AND THE PROPRIETARY PROPERTY OF STEWART CONNECTOR AND SHALL NOT BE REPRODUCED, COPIED, OR USED IN ANY MANNER WITHOUT PRIOR WRITTEN CONSENT OF STEWART CONNECTOR. ONE OR MORE U.S. PATENTS MAY APPLY TO THIS PRODUCT. FOR DETAILS, PLEASE VISIT: HTTP://BELFUSE.COM/STEWART/STEWART_PATENTS/	DRN BY: TRM	DATE 3-9-11
		APPD BY: DHG	DATE 3-10-11
SHEET NO. 2 OF 2		DWG NO. CT740197F	REV. D0

AutoCAD