THE INFORMATION CONTAINED HEREIN IS CONSIDERED "PROPRIETARY" TO BEL FUSE INC. AND SHALL NOT BE COPIED, REPRODUCED OR DISCLOSED WITHOUT THE WRITTEN APPROVAL OF BEL FUSE INC.

PRELIMINARY

RoHS 2002/95/EC

ELECTRICAL CHARACTERISTICS @ 25°C

TURNS RATIO	
TX	1CT : 1
RX	1CT : 1
OCL @ 100kHz/100mVRMS	
8mA DC BIAS	350µH MIN.
INS. LOSS	
1MHz TO 100MHz	-1.0 dB MAX
RET. LOSS (MIN)	
1MHz-30MHz	-18 dB
30MHz-60MHz	-18+20LOG(F/30MHz) dB
60MHz-80MHz	-12 dB
CROSS TALK (TX - RX)	
500kHz-1MHz	-70 dB MIN
10 MHz	-50 dB MIN
30 MHz	-45 dB MIN
50 MHz	-40 dB MIN
100 MHz	-35 dB MIN
CM TO CM REJ	
100kHz-1MHz	-70 dB MIN
10 MHz	-47 dB MIN
30 MHz	-42 dB MIN
60 MHz	-37 dB MIN
100 MHz	-30 dB MIN
CM TO DM REJ	
100kHz-1MHz	-70 dB MIN
10 MHz	-60 dB MIN
30 MHz	-50 dB MIN
60 MHz	-45 dB MIN
100 MHz	-40 dB MIN
HIPOT (Isolation Voltage):	1500 Vrms

100% OF PRODUCTION TESTED TO COMPLY WITH IEEE 802.3 ISOLATION REQUIREMENTS.

SCHEMATIC

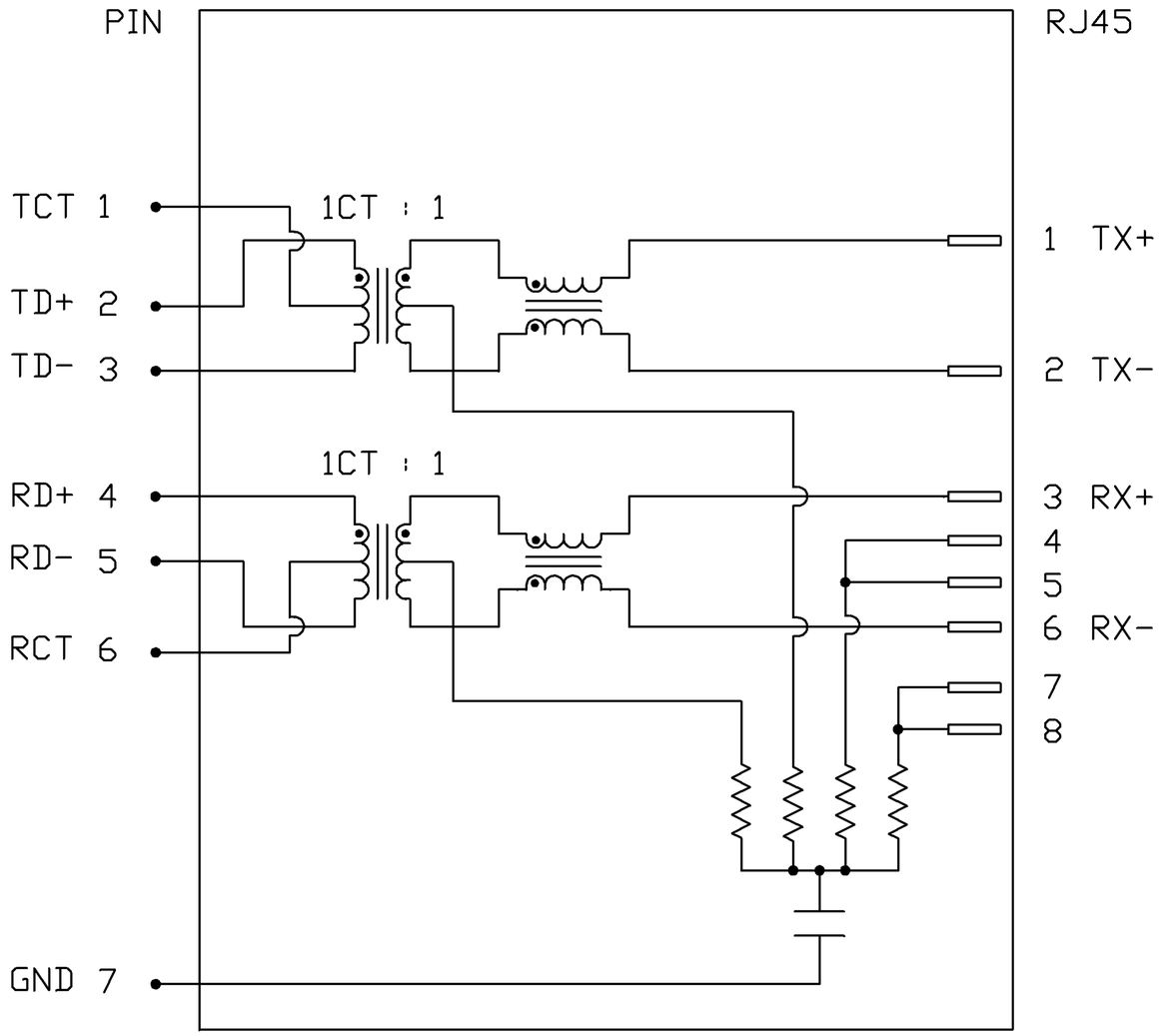

ORIGINATED BY	DATE	TITLE	PART NO. / DRAWING NO.	STANDARD DIM. TOL. IN INCH	[ ] METRIC DIM. AS REFERENCE	
CHOW WANCHUNG	06-12-08	Vertical SMT MagJack®	V895-1001-EN	.X / .XX / .XXX	UNIT : INCH [mm]	REV. : PB
DRAWN BY	DATE		FILE NAME		SCALE : N/A	SIZE : A4
DENG PING	06-12-08		V895-1001-EN_PB.DWG			PAGE : 2

bel COMPONENTS FOR A CONNECTED PLANET

This document is electronically generated. This is a controlled copy if used internally

THE INFORMATION CONTAINED HEREIN IS CONSIDERED "PROPRIETARY" TO BEL FUSE INC. AND SHALL NOT BE COPIED, REPRODUCED OR DISCLOSED WITHOUT THE WRITTEN APPROVAL OF BEL FUSE INC.

PRELIMINARY

RoHS 2002/95/EC

MECHANICAL SPECIFICATION

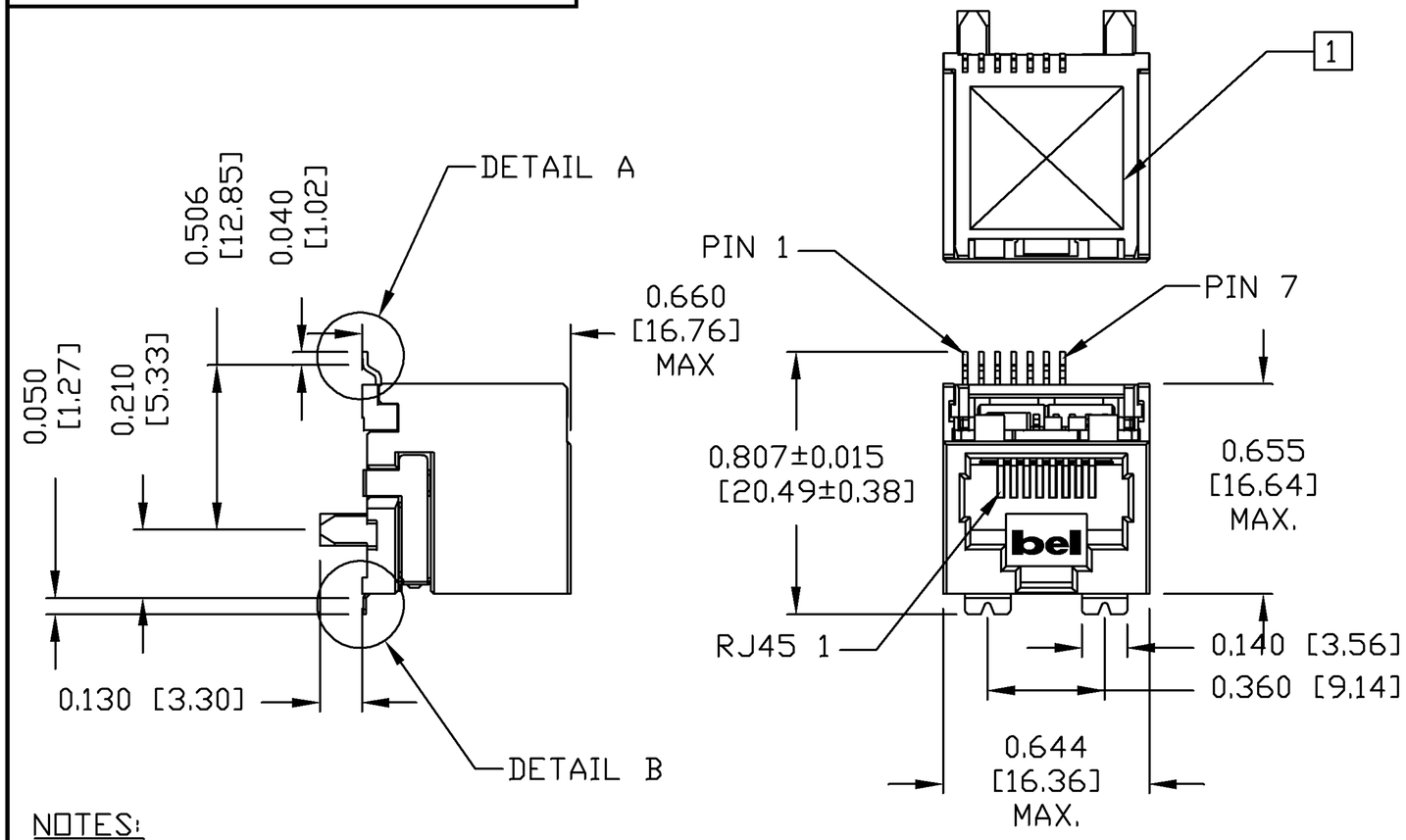

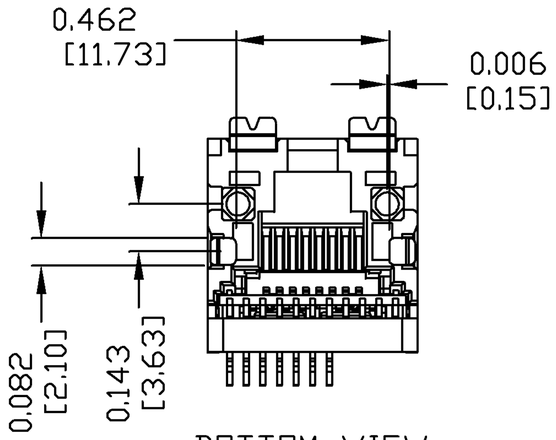

BOTTOM VIEW

NOTES:

PLASTIC HOUSING: THERMOPLASTIC PA.
FLAMMABILITY RATING UL 94V-0

CONTACTS: 30 MICRO-INCH HARD GOLD PLATING

OUTPUT PINS: TIN-COATED COPPER WIRE, 0.016INCH*0.016INCH, SQUARE.

METAL SHIELD: NICKEL PLATED ON COPPER ALLOY

1 MARK PART WITH MFG LOGO, MFG NAME, PART NUMBER AND DATE CODE.

2 THE 4 PADS ARE NOT FOR GROUNDING, BUT TO STRENGTHEN THE RETENTION FORCE ONTO CUSTOMER PCB.

3. RoHS COMPLIANCE, PER EU DIRECTIVE 2002/95/EC.

c UL us UL RECOGNIZED - FILE #E132408.

4.JACK CAVITY CONFORMS TO FCC RULES AND REGULATIONS.

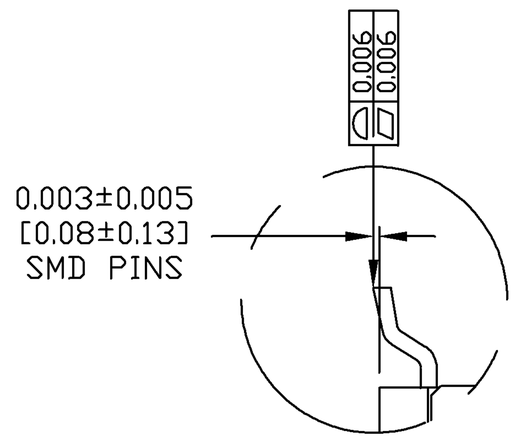

DETAIL A
(SCALE 3:1)

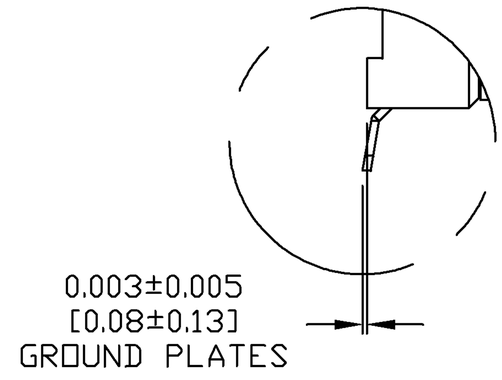

DETAIL B
(SCALE 3:1)

ORIGINATED BY	DATE	TITLE	PART NO. / DRAWING NO.	STANDARD DIM. TOL. IN INCH		[ ] METRIC DIM. AS REFERENCE	
ZX HUANG	06-12-08	Vertical SMT MagJack®	V895-1001-EN	.X		UNIT : INCH [mm]	REV. : PB
DRAWN BY	DATE		FILE NAME	.XX		SCALE : N/A	SIZE : A4
LU XUEPING	06-12-08		V895-1001-EN_PB.DWG	.XXX	±0.010		PAGE : 3

bel COMPONENTS FOR A CONNECTED PLANET

This document is electronically generated. This is a controlled copy if used internally

THE INFORMATION CONTAINED HEREIN IS CONSIDERED 'PROPRIETARY' TO BEL FUSE INC. AND SHALL NOT BE COPIED, REPRODUCED OR DISCLOSED WITHOUT THE WRITTEN APPROVAL OF BEL FUSE INC.

PRELIMINARY

RoHS 2002/95/EC

RECOMMENDED PCB FOOTPRINT

COMPONENT SIDE VIEW

(SHADED AREA ARE SOLDER PADS)

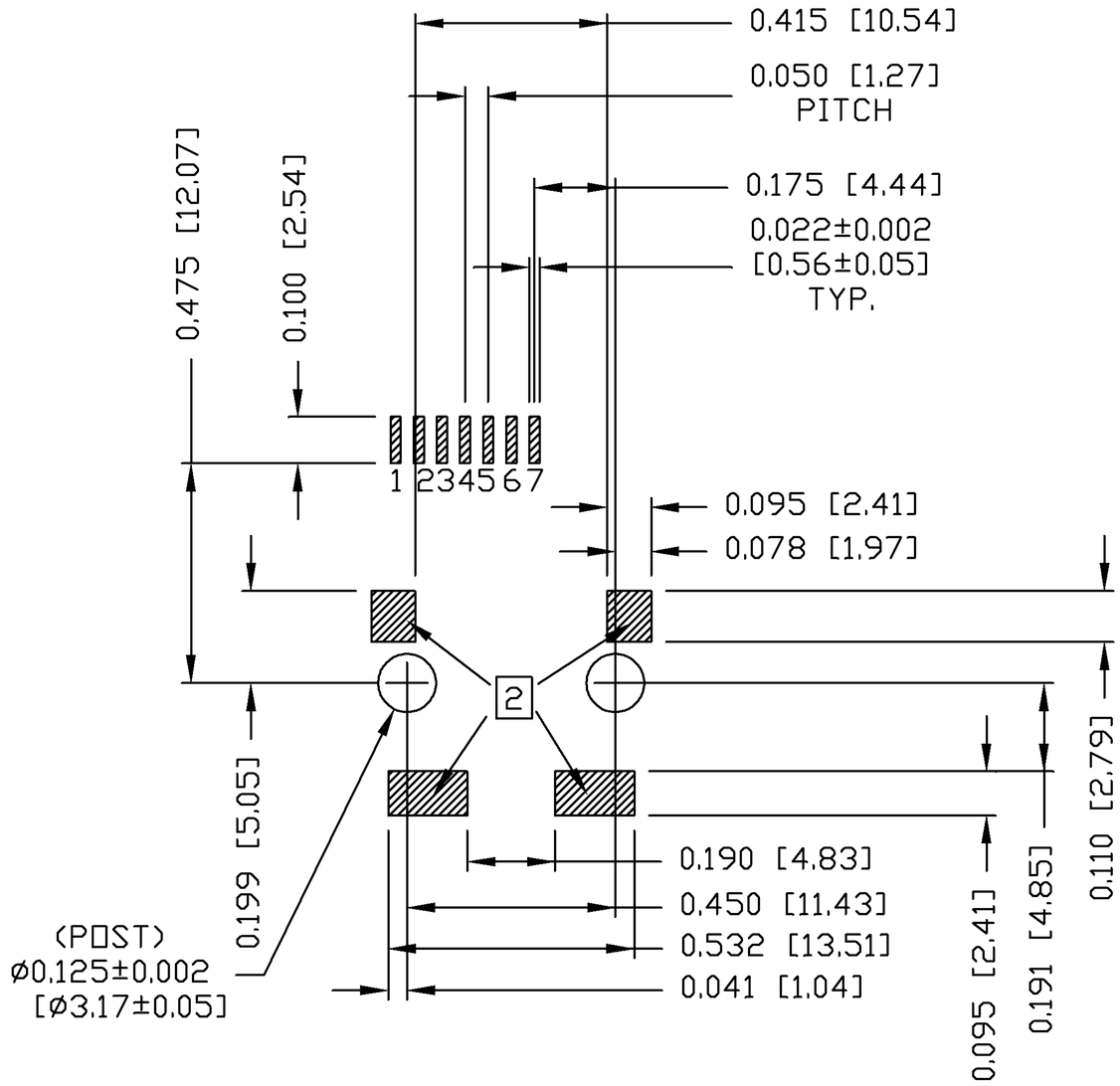

PACKING INFORMATION

PACKING TRAY : 0200-9999-I5(TOP)
0200-9999-I6(BOTTOM)

PACKING QUANTITY : 88 PCS FINISHED GOODS PER TRAY
11 TRAY (968 PCS FINISHED GOODS)
PER CARTON BOX

NOTE: CARDBOARDS ARE PLACED BETWEEN LAYERS
OF PACKIING TRAY INSIDE CARTON BOX
(INCLUDE THE UPPERMOST AND LOWERMOST TRAY)

ORIGINATED BY	DATE	TITLE	PART NO. / DRAWING NO.	STANDARD DIM. TOL. IN INCH		[ ] METRIC DIM. AS REFERENCE	
ZX HUANG	06-12-08	Vertical SMT MagJack®	V895-1001-EN	.X		UNIT : INCH [mm]	REV. : PB
DRAWN BY	DATE		FILE NAME	.XX		SCALE : N/A	SIZE : A4
LU XUEPING	06-12-08		V895-1001-EN_PB.DWG	.XXX	±0.010		PAGE : 4

bel COMPONENTS FOR A CONNECTED PLANET

This document is electronically generated. This is a controlled copy if used internally