MODEL NO.	PACKAGING
148-0901-701	ONE PCS PER BAG

REV	ECO	DATE
001	ECO-17-0033	12/18/2017

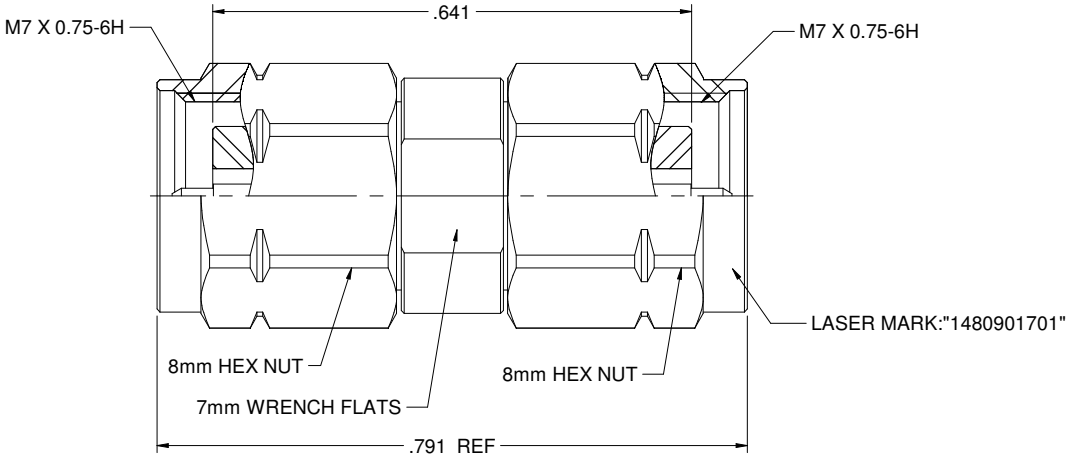

NOTES: UNLESS OTHERWISE SPECIFIED

1. MATERIAL & FINISH:
   1.1 BODY & SHELL: PASSIVATED STAINLESS STEEL
   1.2 CONTACT PIN : GOLD PLATED BERYLLIUM COPPER
   1.3 INSULATOR: ULTEM 1000 AMBER
   1.4 GASKET: SILICONE RED
   1.5 C RING: BERYLLIUM COPPER

2. ELECTRICAL:
   2.1 IMPEDANCE: 50 OHMS
   2.2 FREQUENCY RANGE: 0-67 GHZ
   2.3 VOLTAGE STANDING WAVE RATIO: 1.2 MAX
   2.4 INSERTION LOSS: 0.05 X $\sqrt{F}$ (GHZ)DB MAX
   2.5 DIELECTRIC WITHSTANDING VOLTAGE: 500 VRMS MIN
   2.6 CONTACT RESISTANCE: CENTER CONTACT: 4 MILLIOHMS MAX
   OUTER CONTACT: 2.5 MILLIOHMS MAX
   2.7 INSULATION RESISTANCE: 5000 MOHM MIN

3. MECHANICAL:
   3.1 ENGAGEMENT/ DISENGAGEMENT FORCE: 0.23 NM MAX
   3.2 COUPLING PROOF TORQUE: 1.65 NM MIN
   3.3 COUPLING NUT RETENTION: 267 N MIN
   3.4 CONTACT RETENTION: 20 N MIN
   3.5 DURABILITY: 500 CYCLES MIN

4. ENVIRONMENT:
   4.1 THERMAL SHOCK: MIL-STD-202, METHOD 107, CONDITION B.
   4.2 OPERATING TEMPERATURE: -55 TO 125℃
   4.3 SALT SPRAY: MIL-STD-202, METHOD 101, CONDITION B
   4.4 SHOCK: MIL-STD-202, METHOD 213, CONDITION I
   4.5 VIBRATION: MIL-STD-202, METHOD 204, CONDITION D
   4.6 MOISTURE RESISTANCE: MIL-STD-202, METHOD 106

cinch connectivity solutions

This PROPRIETARY Document is property of Cinch Connectivity Solutions. Information herein, which can not be copied, and by accepting it, you agree to understanding that it is not to be disclosed or used without prior written permission.

INTERPRET DRAWING IN ACCORDANCE WITH ASME Y14.5-2009

Model No. 148-0901-701/710

RoHS2 2011/65/EU

Cage Code

3RD ANGLE PROJECTION

UNLESS OTHERWISE SPECIFIED UNITS INCH

.XXX ±.02
.XXXX ±.01
ANGLES ±5°

Drawn by: Betty.Yu

Date 12/12/2017

Johnson

Title: ADAPTER ASSEMBLY, PLUG TO PLUG,1.85mm

Drawing No. 148-0901-701/710

Rev. 001

Size C | DO NOT SCALE DRAWING | Workmanship Std NONE | Sheet 1 of 1