| MODEL NO. | PACKAGING |
|---|---|
| 134-1000-027 | ONE PCS PER BAG |

| REV | ECO | DATE |
|---|---|---|
| 001 | ECO-17-0033 | 12/18/2017 |
| | | |
| | | |

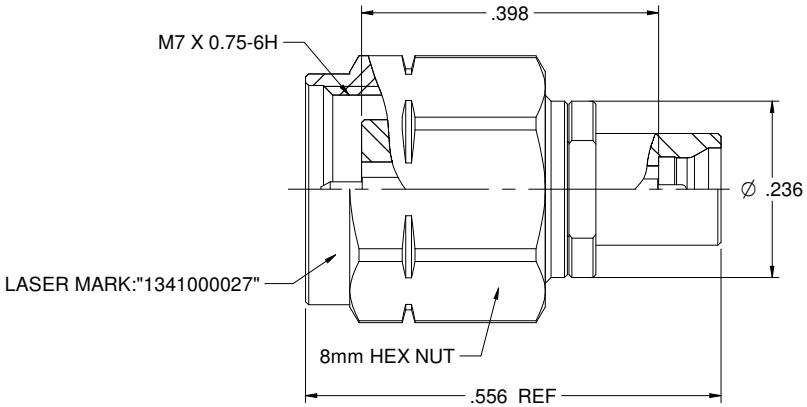


NOTES: UNLESS OTHERWISE SPECIFIED

1. MATERIAL & FINISH:
   1.1 BODY,CONTACT BODY & SHELL: PASSIVATED STAINLESS STEEL
   1.2 CONTACT PIN: GOLD PLATED BERYLLIUM COPPER
   1.3 INSULATOR: ULTEM 1000 AMBER
   1.4 C RING: BERYLLIUM COPPER
   1.5 GASKET: SILICONE RED

2. ELECTRICAL:
   2.1 IMPEDANCE: 50 OHMS
   2.2 FREQUENCY RANGE: 0-67 GHz
   2.3 VOLTAGE STANDING WAVE RATIO: 1.25 MAX
   2.4 CONTACT RESISTANCE: CENTER CONTACT: 6 MILLIOHMS MAX
   OUTER CONTACT: 2.5 MILLIOHMS MAX
   2.5 DIELECTRIC WITHSTANDING VOLTAGE: 325VRMS MIN
   2.6 INSULATION RESISTANCE: 5000 MOHM MIN

3. MECHANICAL:
   3.1 ENGAGEMENT FORCE: 0.23 NM MAX (1.85MM)
   FULL DETENT: 19 N MAX,SMOOTH BORE: 11 N MAX (SMPM)
   3.2 DISENGAGEMENT FORCE: 0.23 NM MAX (1.85MM)
   FULL DETENT: 29 N MAX, SMOOTH BORE: 11N MAX (SMPM)
   3.3 COUPLING PROOF TORQUE: 1.65 NM MIN
   3.4 COUPLING NUT RETENTION: 267 N MIN
   3.5 CONTACT RETENTION: 20 N MIN
   3.6 DURABILITY: 500 CYCLES MIN

4. ENVIRONMENT:
   4.1 THERMAL SHOCK: MIL-STD-202, METHOD 107, CONDITION B.
   4.2 OPERATING TEMPERATURE: -55 TO 125℃
   4.3 SALT SPRAY: MIL-STD-202, METHOD 101, CONDITION B
   4.4 SHOCK: MIL-STD-202, METHOD 213, CONDITION I
   4.5 VIBRATION: MIL-STD-202, METHOD 204, CONDITION D
   4.6 MOISTURE RESISTANCE: MIL-STD-202, METHOD 106

cinch connectivity solutions

This PROPRIETARY Document is property of Cinch Connectivity Solutions. Information in this document, including, but not limited to, the specifications, dimensions, and tolerances, in understanding that it is not to be reproduced or transmitted without express written permission of Cinch Connectivity Solutions.

INTERPRET DRAWING IN ACCORDANCE WITH ASME Y14.5-2009

Model No. 134-1000-027

RoHS2 ☑ 2011/65/EU

Cage Code

3RD ANGLE PROJECTION

UNLESS OTHERWISE SPECIFIED UNITS INCH

.XXX ±.02
.XXXX ±.01
ANGLES ±5°

Drawn by: Betty.Yu

Date: 12/12/2017

**Johnson**

Title: ADAPTER ASSEMBLY,1.85mm PLUG TO SMPM PLUG (FULL DENTED)

Drawing No. 134-1000-027

Rev. 001

Size C | DO NOT SCALE DRAWING | Workmanship Std NONE | Sheet 1 of 1