MODEL NO.	PACKAGING
148-0701-202	ONE PCS PER BAG

REV	ECO	DATE
001	ECO-19-0037	08/28/2019

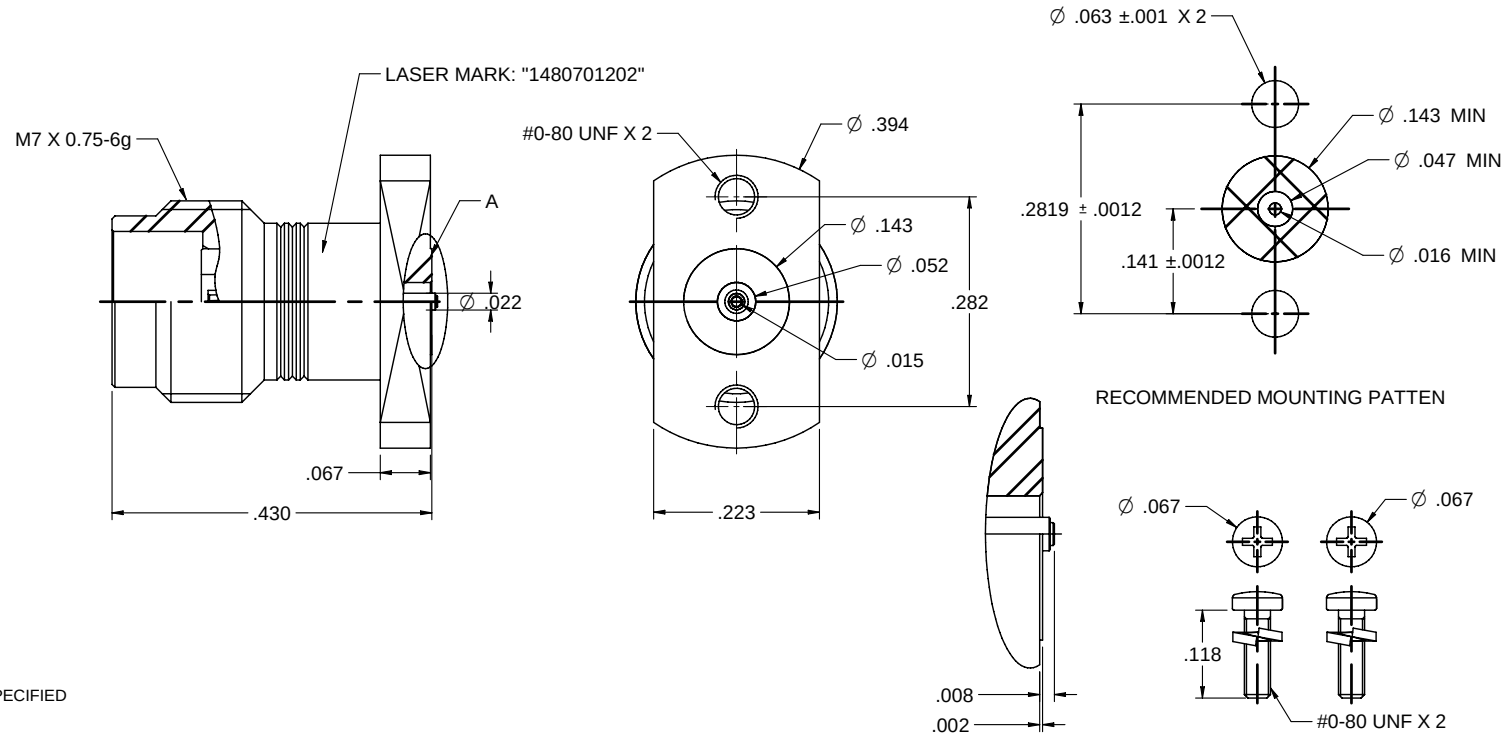

A DETAIL (10/1)

SCALE (3/1)

1. BOARD THICKNESS: 1.57-2.79mm

NOTES: UNLESS OTHERWISE SPECIFIED

1. MATERIAL & FINISH:
   - 1.1 BODY: PASSIVATED STAINLESS STEEL
   - 1.2 CONTACT PIN : GOLD PLATED BERYLLIUM COPPER
   - 1.3 INSULATOR: PTFE WHITE
   - 1.4 WASHER: STAINLESS STEEL
   - 1.5 BOLT: SUS302
   - 1.6 LOCK RING: NICKEL PLATED BRASS

2. ELECTRICAL:
   - 2.1 IMPEDANCE: 50 OHMS
   - 2.2 FREQUENCY RANGE: DC-67 GHz
   - 2.3 INSULATION RESISTANCE: 5000 MOHM MIN
   - 2.4 CONTACT RESISTANCE:
     - 2.4.1 CENTER CONTACT: 4 MILLIOHM MAX
     - 2.4.2 OUTER CONTACT: 2.5 MILLIOHM MAX
   - 2.5 DIELECTRIC WITHSTANDING VOLTAGE: 500VRMS MIN
   - 2.6 VOLTAGE STANDING WAVE RATIO (VSWR): 1.3 MAX

3. MECHANICAL:
   - 3.1 ENGAGEMENT/ DISENGAGEMENT FORCE: 0.23 NM MAX
   - 3.2 CONTACT RETENTION: 7 N MIN
   - 3.3 DURABILITY: 500 CYCLES MIN

4. ENVIRONMENT:
   - 4.1 THERMAL SHOCK: MIL-STD-202, METHOD 107, CONDITION B.
   - 4.2 OPERATING TEMPERATURE: -65 TO 165°C
   - 4.3 SHOCK: MIL-STD-202, METHOD 213, CONDITION I
   - 4.4 VIBRATION: MIL-STD-202, METHOD 204, CONDITION D
   - 4.5 MOISTURE RESISTANCE: MIL-STD-202, METHOD 106

cinch	Model No. 148-0701-201/210		Johnson
	RoHS2 ☑ 2011/65/EU	Cage Code	Title: JACK,PCB, COMPRESSION MOUNT,1.85mm
	UNLESS OTHERWISE SPECIFIED UNITS: INCH .XXX ±.02 .XXXX ±.01 ANGLES ±5°	3RD ANGLE PROJECTION	Drawing No. 148-0701-201/210 Rev. 001
		Drawn by: Betty.Yu	
		Date: 08/28/2019	Size C · DO NOT SCALE DRAWING · Workmanship Std. NONE · Sheet 1 of 1