THIS DRAWING AND THE SUBJECT MATTER SHOWN THEREON ARE CONFIDENTIAL AND THE PROPERTY OF BEL/STEWART/TRP CONNECTOR AND SHALL NOT BE REPRODUCED, COPIED, OR USED IN ANY MANNER WITHOUT THE WRITTEN CONSENT OF TRP CONNECTOR.

PRODUCT MAY BE PROTECTED BY ONE OR MORE OF THE FOLLOWING US PATENTS:
5736910 5939955 6425781 6428361 6554638 6840817 7123117
7429195 7717749 7808751 6217391 6149050 7924130

REVISIONS

P	LTR	DESCRIPTION	DATE	DWN	APVD
	2	EC-1411035 COMPANY LOGO CHANGE	18DEC2014	GZ	TY

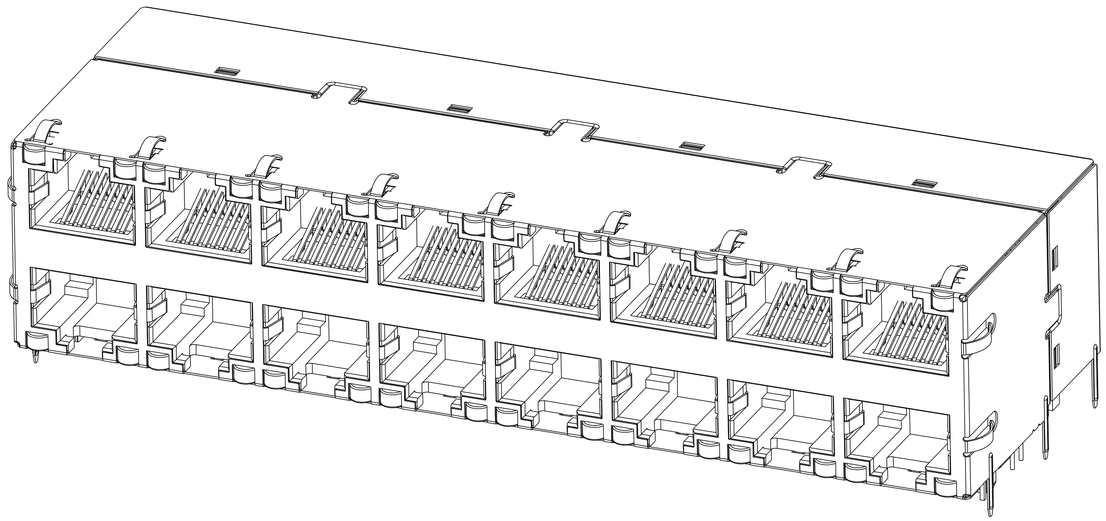

S9HG154P1 GIGABIT UPoE PLUS CIRCUIT 2 7

TOP AND BOTTOM PORTS

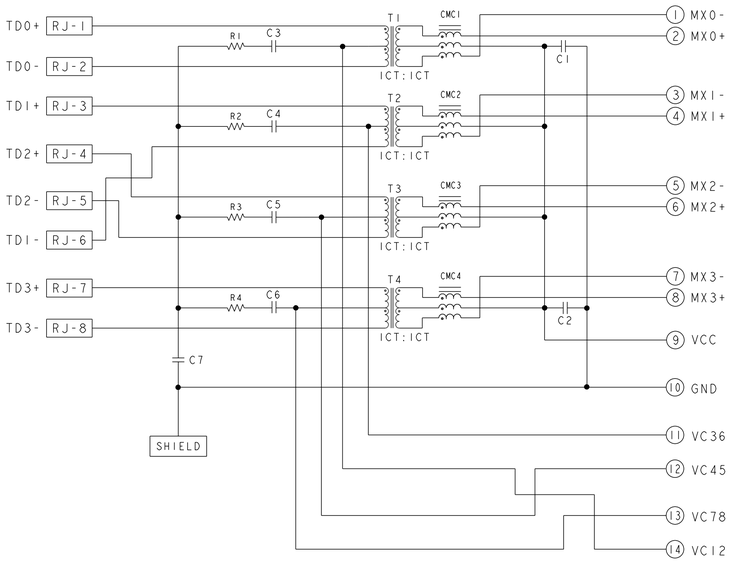

C1-C2 =10nF, 50V, X7R,CAPACITORS
C3-C6 =22nF, 100V, CAPACITORS
C7 =1000pF, 2kV, CAPACITOR
R1-R4 =75 Ohms,1/16W,RESISTORS

1. MATERIALS:
   PLASTIC HOUSING: BLACK, THERMOPLASTIC FLAMMABILITY RATING UL 94V-0
   SHIELD: BRASS, PREPLATED WITH 0.76um MIN SEMI-BRIGHT NICKEL,
   POST DIPPED WITH 2.54um MIN SAC SOLDER OR PURE TIN SOLDER ON SOLDER TAILS
   CONTACTS: PHOSPHOR BRONZE, 1.27um MIN OVERALL NICKEL
   UNDERPLATE WITH SELECT 1.27um MIN GOLD AT MATING INTERFACE AND
   2.54um MIN MATTE TIN ON SOLDER TAILS.
   LED: DIFFUSED EPOXY LENS, CARBON STEEL LEAD FRAME TAILS OF LED
   ARE PREPLATED WITH 2.03um MIN SILVER OVER 1.02um MIN NICKEL
   UNDERPLATE OVER 1.02um MIN COPPER UNDERPLATE. POST-PLATED WITH
   2.54um MIN MATTE TIN AND/OR SAC SOLDER DIP OR PURE TIN SOLDER DIP

2. MAGNETICS
   APPLICATION: 10/100/1000 BASE-T, ULTRA PoE PLUS
   IMPEDANCE: 100 OHMS
   TURNS RATIO (CHIP:CABLE): 1:1 ALL FOUR PAIRS
   OPEN CIRCUIT INDUCTANCE (OCL): ALL CHANNELS
   350uH MIN @ 100KHz, 0.1 VRMS WITH 8mA DC BIAS FROM 0°C TO 70°C,
   120uH MIN @ 100KHz, 0.1 VRMS WITH 19mA DC BIAS FROM 0°C TO 70°C
   ALL FOUR PAIRS BI-DIRECTIONAL
   POE CURRENT: 600mA DC MAX
   PERFORMANCE @ 25°C:
   INSERTION LOSS (IL): 1.1dB MAX FROM 0.5MHz TO 100MHz
   RETURN LOSS (RL): 18dB MIN FROM 0.5MHz TO 40MHz
   12-20LOG(f/80)dB MIN FROM 40.1MHz TO 100MHz
   CROSSTALK ATTENUATION: 35dB MIN FROM 0.5MHz TO 40MHz
   33-20LOG(f/50)dB MIN FROM 40.1MHz TO 100MHz
   COMMON MODE REJECTION RATIO (CMRR): 30dB MIN FROM 0.5MHz TO 100MHz
   ISOLATION VOLTAGE: 2250VDC(MAX) FOR 60 SECONDS WITH A RISE TIME OF
   500V/SEC AND WITH ALL PORTS CONNECTED.

3. PART NUMBER, DATE CODE AND COUNTRY OF ORIGIN ARE LOCATED IN APPROXIMATE AREA SHOWN.DATE CODE: "YY" IS YEAR, "WW" IS WORK WEEK, "D" IS DAY OF WEEK, WITH SUNDAY=1

4. TRP CONNECTOR LOGO AND AGENCY APPROVAL LOGO ARE LOCATED IN APPROXIMATE AREA SHOWN.

5. OPERATING TEMP: FROM 0°C TO +70°C.

6. RJ45 CAVITY CONFORMS TO FCC RULES AND REGULATION PART 68 SUBPART F.

7. INDICATED MAGNETIC CONNECTIONS ARE SYMMETRICAL AND SUPPORT AUTO-MDI/MDIX.

8. DATUM AND BASIC DIMENSION ESTABLISHED BY CUSTOMER.

9. BASIC DIMENSION ESTABLISHED BY CUSTOMER, BUT MAY NOT BE GREATER THAN 5.08mm.

10. LEDS ARE DRIVEN WITH CONSTANT CURRENT AT APPROX 20mA
    LED COLOR: DOMINANT WAVELENGTH (λD): GREEN 568 nm TYP. @ IF=20mA
    FORWARD VOLTAGE (VF): GREEN 2.2V TYP. @ IF=20mA
    DOMINANT WAVELENGTH (λD): ORANGE 605 nm TYP. @ IF=20mA
    FORWARD VOLTAGE (VF): ORANGE 2.1V TYP. @ IF=20mA

11. THE PARTS ARE RECOMMENDED FOR WAVE SOLDERING PROCESS, PEAK TEMPERATURE 260°C MAX, 10 SECONDS MAX.

3.56	GRN/ORA	GRN/ORA	GRN/ORA	GRN/ORA	2250168-7
DIM A	BOTTOM LED 2	BOTTOM LED 1	TOP LED 2	TOP LED 1	PART NUMBER

THIS DRAWING IS A CONTROLLED DOCUMENT.

DIMENSIONS: mm

TOLERANCES UNLESS OTHERWISE SPECIFIED:
0 PLC ±0.25
1 PLC ±0.25
2 PLC ±0.25
3 PLC ±
4 PLC ±
ANGLES: ±

PRODUCT SPEC: 108-104004
APPLICATION SPEC: -

DWN GABRIEL.ZHOU 18MAR2014
CHK TONY YUAN 18MAR2014
APVD TONY YUAN 18MAR2014

trp CONNECTOR a bel group — DONGGUAN CHINA

MODEL NAME: MAGJACK STACK 4PPoE

DESC: 2X8 S9HG154P1 GIGABIT 4PPoE W/ LED

SIZE A1 | CAGE CODE | DRAWING NO C-2250168 | RESTRICTED TO -

CUSTOMER DRAWING | SCALE 4:1 | SHEET 1 OF 4 | REV 2

© COPYRIGHT TRP connector ALL RIGHTS RESERVED

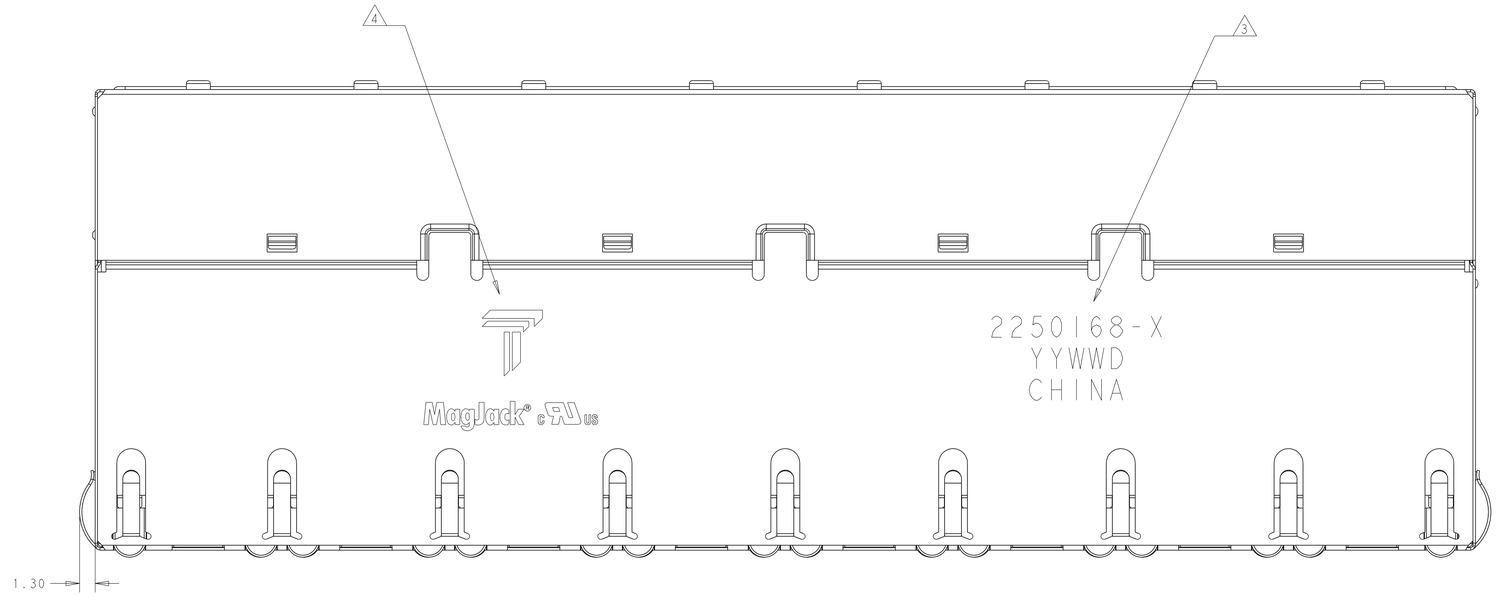

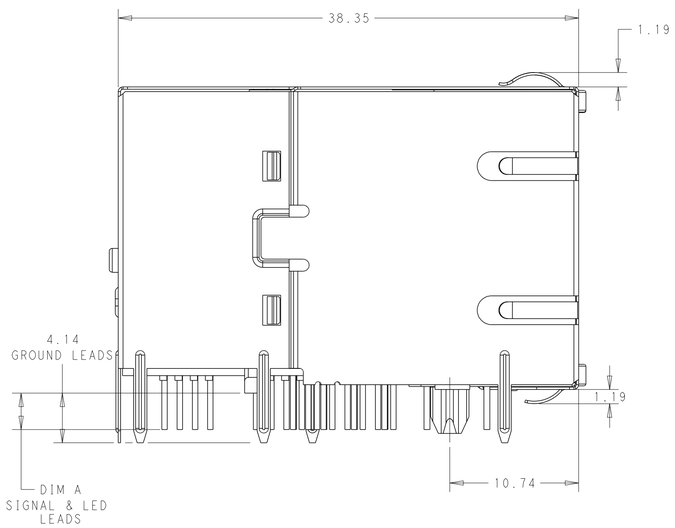

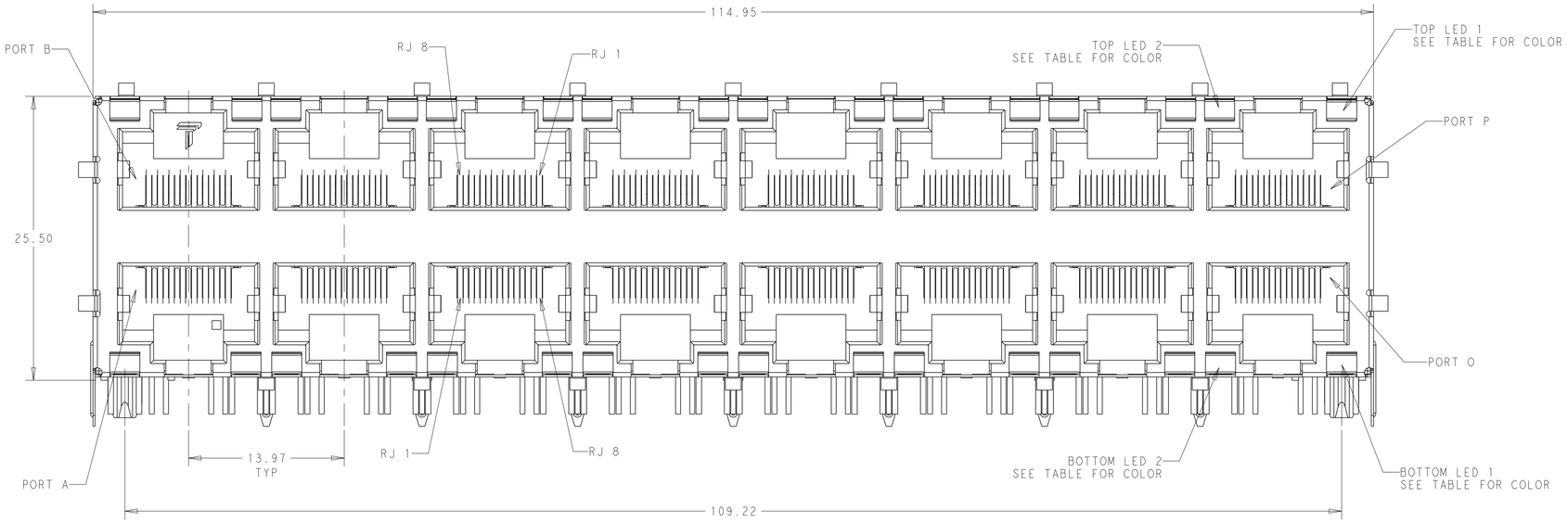

THIS DRAWING IS A CONTROLLED DOCUMENT.

DIMENSIONS: mm

TOLERANCES UNLESS OTHERWISE SPECIFIED:

0 PLC	±0.25
1 PLC	±0.25
2 PLC	±0.25
3 PLC	±-
4 PLC	±-
ANGLES	±-

PRODUCT SPEC: 108-104004

APPLICATION SPEC: -

DWN	GABRIEL.ZHOU	18MAR2014
CHK	TONY YUAN	18MAR2014
APVD	TONY YUAN	18MAR2014

MODEL NAME: MAGJACK STACK 4PPoE

trp CONNECTOR a bel group — DONGGUAN CHINA

DESC: 2X8 S9HG154P1 GIGABIT 4PPoE W/ LED

SIZE	CAGE CODE	DRAWING NO	RESTRICTED TO
A1		C-2250168	-

CUSTOMER DRAWING | SCALE 4:1 | SHEET 2 OF 4 | REV 2

© COPYRIGHT TRP connector ALL RIGHTS RESERVED

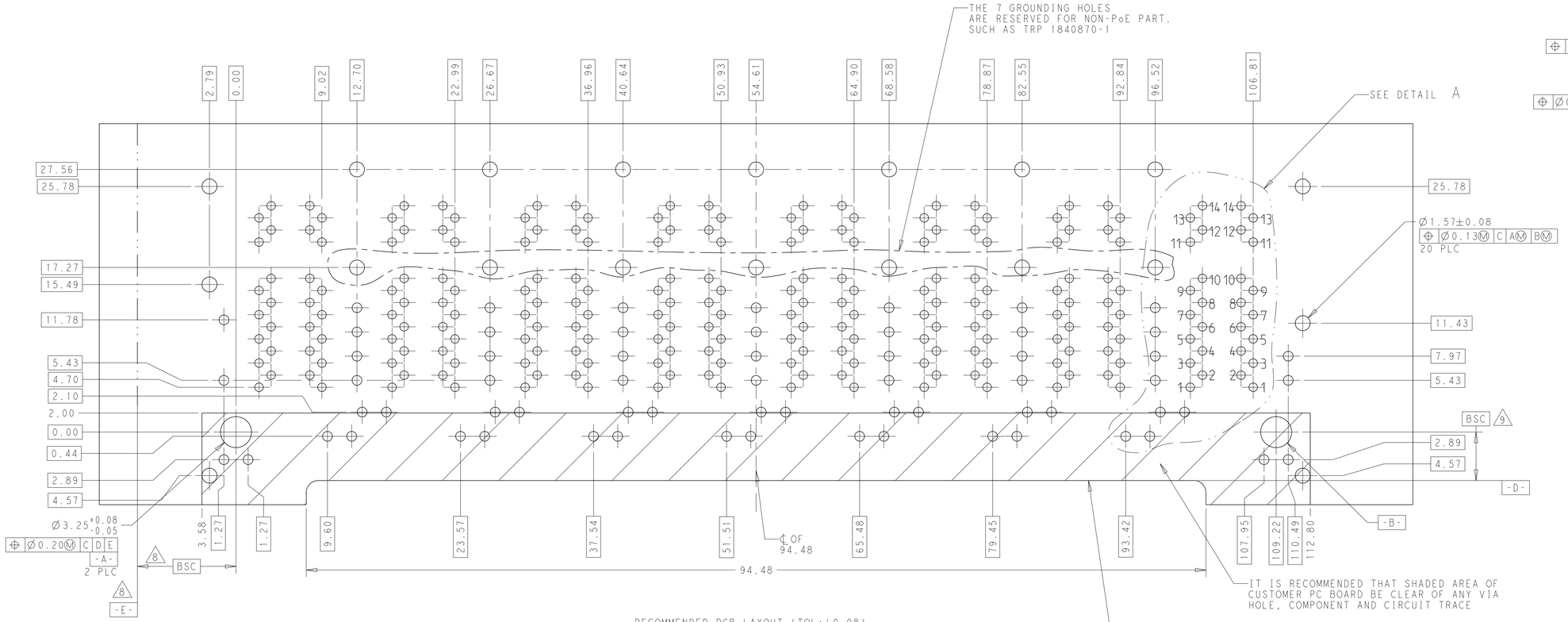

RECOMMENDED PCB LAYOUT (TOL:±0.08)
COMPONENT SIDE VIEW

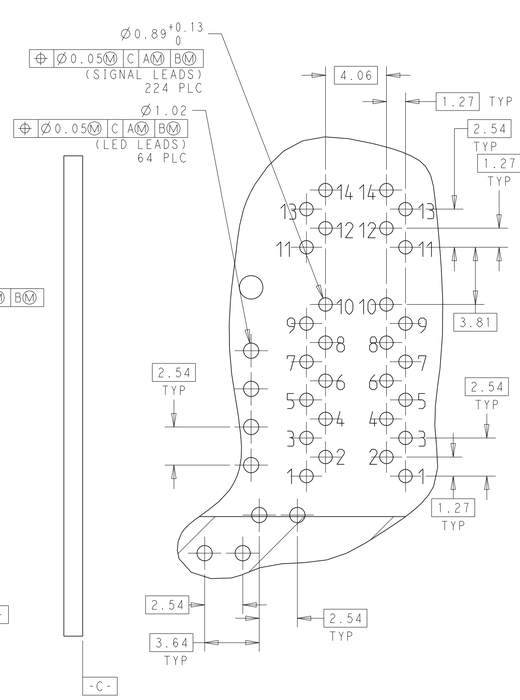

DETAIL A
SCALE 5:1

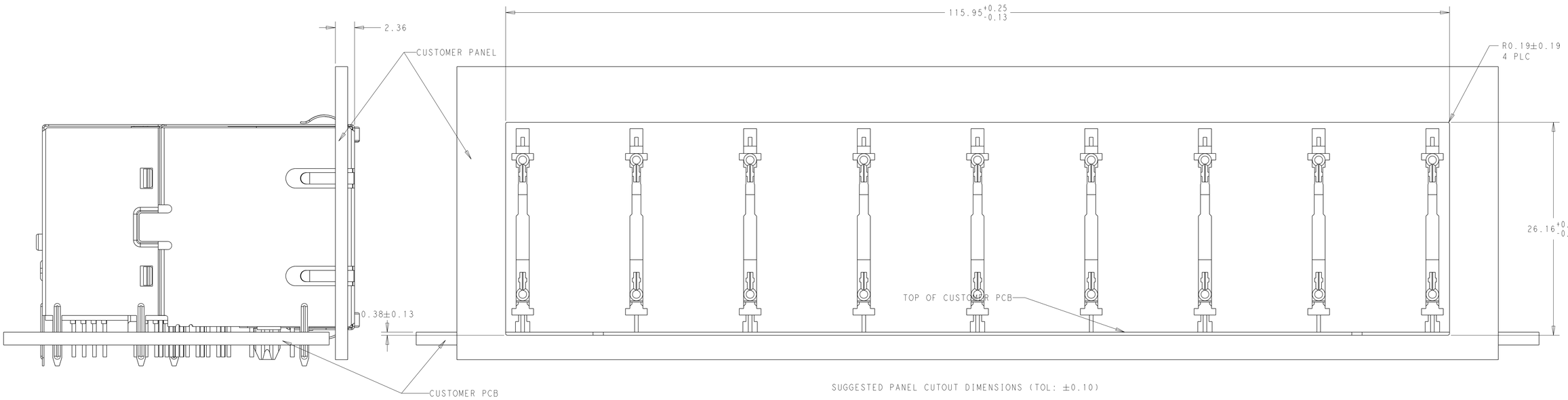

SHOWN WITH PANEL AND
CUSTOMER PCB ASSEMBLY

SUGGESTED PANEL CUTOUT DIMENSIONS (TOL: ±0.10)

THIS DRAWING IS A CONTROLLED DOCUMENT.	DWN GABRIEL.ZHOU 18MAR2014	trp CONNECTOR a bel group	DONGGUAN CHINA
DIMENSIONS: mm	CHK TONY YUAN 18MAR2014		
TOLERANCES UNLESS OTHERWISE SPECIFIED: 0 PLC ±0.25, 1 PLC ±0.25, 2 PLC ±0.25, 3 PLC ±-, 4 PLC ±-, ANGLES ±-	APVD TONY YUAN 18MAR2014	DESC 2X8 S9HG154P1 GIGABIT 4PPoE W/ LED	
PRODUCT SPEC 108-104004	MODEL NAME MAGJACK STACK 4PPoE	SIZE A1 / CAGE CODE / DRAWING NO C-2250168	RESTRICTED TO -
APPLICATION SPEC -	CUSTOMER DRAWING	SCALE 4:1 / SHEET 3 OF 4	REV 2

© COPYRIGHT TRP connector ALL RIGHTS RESERVED

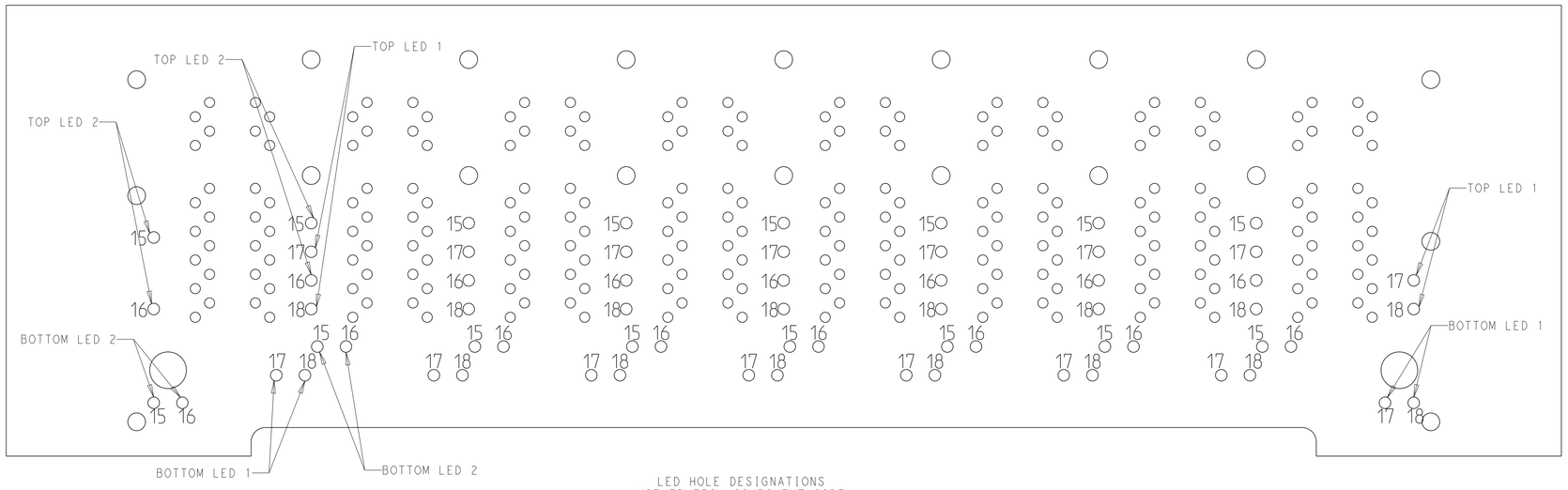

LED HOLE DESIGNATIONS
VIEWED FROM COMPONENT SIDE

BI-COLOR LED

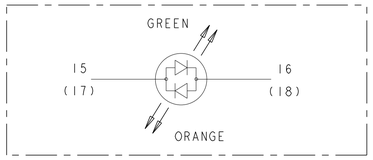

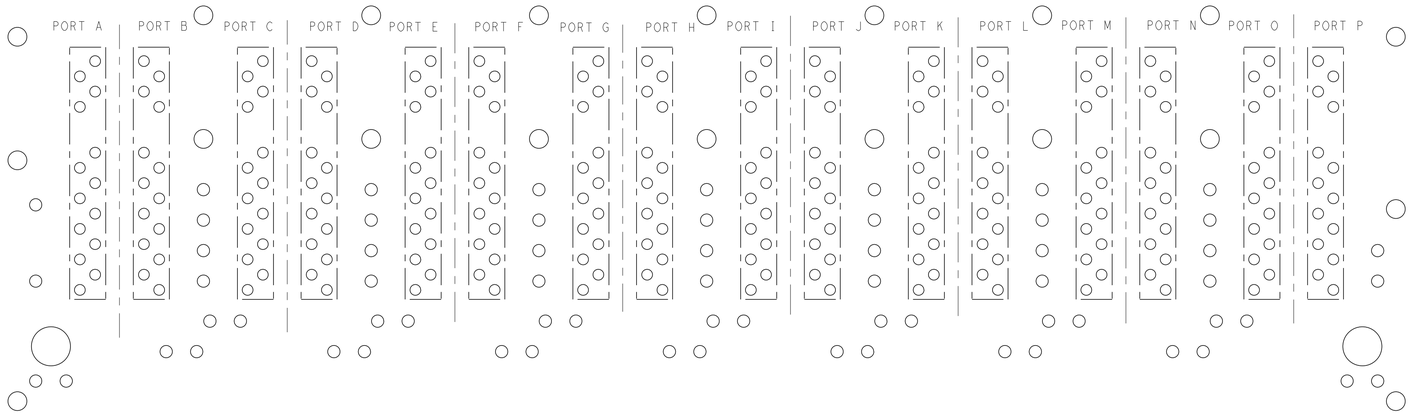

PORT ASSIGNMENT
COMPONENT SIDE VIEW

THIS DRAWING IS A CONTROLLED DOCUMENT.		DWN GABRIEL.ZHOU 18MAR2014	trp CONNECTOR a bel group — DONGGUAN CHINA
DIMENSIONS: mm	TOLERANCES UNLESS OTHERWISE SPECIFIED: 0 PLC ±0.25, 1 PLC ±0.25, 2 PLC ±0.25, 3 PLC ±-, 4 PLC ±-, ANGLES ±-	CHK TONY YUAN 18MAR2014	
		APVD TONY YUAN 18MAR2014	
PRODUCT SPEC 108-104004	APPLICATION SPEC -	MODEL NAME MAGJACK STACK 4PPoE	DESC 2X8 S9HG154P1 GIGABIT 4PPoE W/ LED
			SIZE A1 · CAGE CODE · DRAWING NO C-2250168 · RESTRICTED TO -
		CUSTOMER DRAWING	SCALE 4:1 · SHEET 4 OF 4 · REV 2