THE INFORMATION CONTAINED HEREIN IS CONSIDERED 'PROPRIETARY' TO BEL FUSE INC. AND SHALL NOT BE COPIED, REPRODUCED OR DISCLOSED WITHOUT THE WRITTEN APPROVAL OF BEL FUSE INC.

RoHS 2002/95/EC

LED 3 POLARITY			LED 4 POLARITY		
PIN 31	PIN 32	COLOR	PIN 33	PIN 34	COLOR
+	−	YELLOW	+	−	GREEN

ELECTRICAL CHARACTERISTICS @ 25°C

TURNS RATIO

TP1	1CT : 1CT ±2%
TP2	1CT : 1CT ±2%
TP3	1CT : 1CT ±2%
TP4	1CT : 1CT ±2%

OCL @ 100kHz/100mVRMS

8mA DC BIAS (0°C − 70°C) 350μH MIN.

INS. LOSS

100KHz−100MHz −1.2 dB MAX

RET. LOSS (MIN) @ 100OHMS ±15%

0.1MHz−40MHz −18 dB

40MHz−100MHz −12+20LOG(f/80MHz) dB

CM TO CM REJ

100KHz−100MHz −30 dB MIN

CROSS TALK

1MHz−100MHz −35 dB MIN

HIPOT (Isolation Voltage): 1500 Vrms

100% OF PRODUCTION TESTED TO COMPLY WITH IEEE 802.3 ISOLATION REQUIREMENTS.

LED 3 (Super bright)

VF (FORWARD VOLTAGE)	IF=20mA	YELLOW	2.1V TYP.
λD (DOMINANT WAVELENGTH)	IF=20mA	YELLOW	590nm TYP.

LED 4 (Super bright)

VF (FORWARD VOLTAGE)	IF=20mA	GREEN	2.2V TYP.
λD (DOMINANT WAVELENGTH)	IF=20mA	GREEN	565nm TYP.

SCHEMATIC FOR LOWER PORT(PORT1)

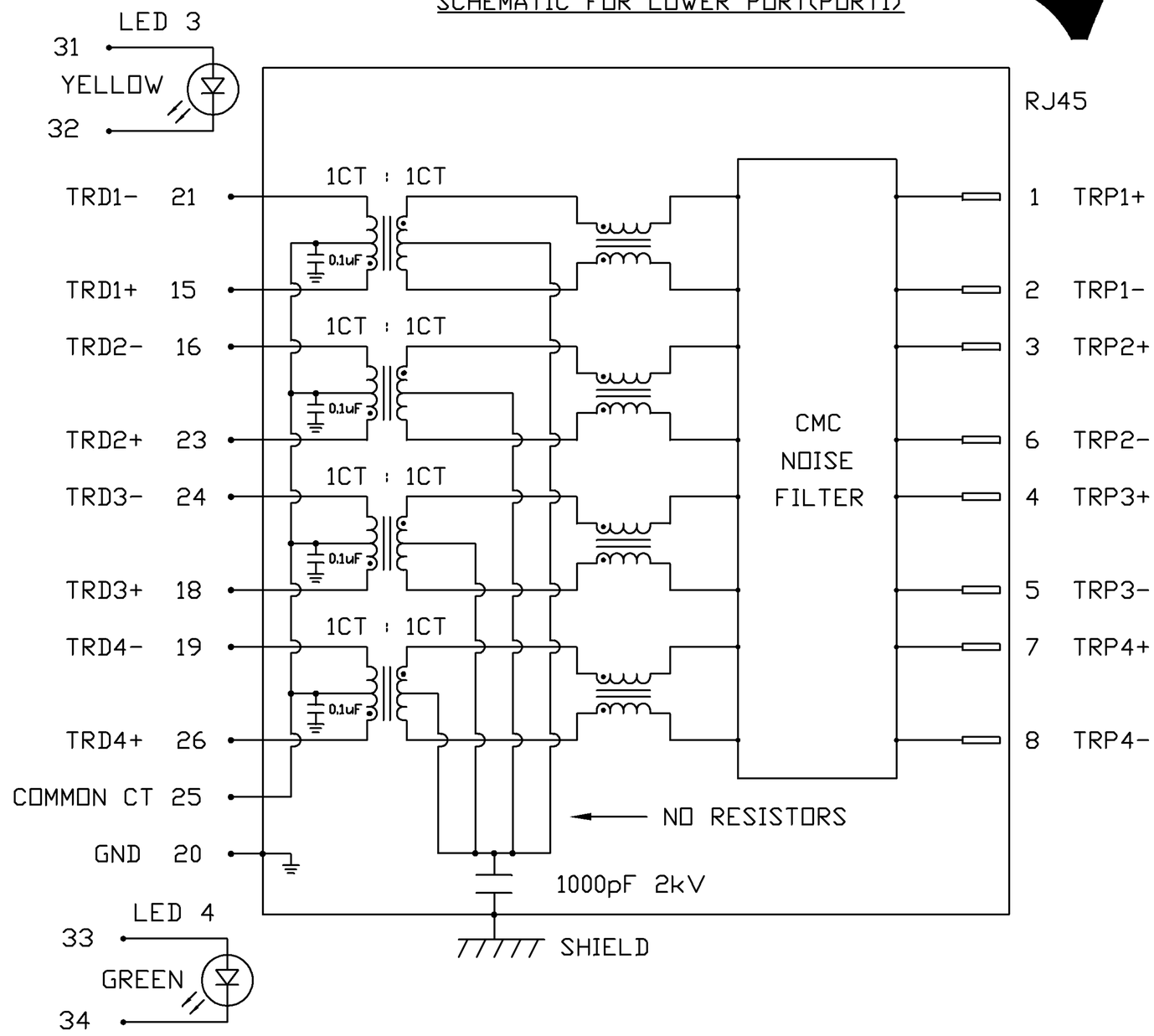

ORIGINATED BY	DATE	TITLE	PART NO. / DRAWING NO.	STANDARD DIM. TOL. IN INCH	[ ] METRIC DIM. AS REFERENCE	
CHOW WANCHUNG	10-25-08	2X1 gigabit MagJack® (with LED)	0845-2D1A-BY	.X	UNIT : INCH [mm]	REV. : A
DRAWN BY	DATE		FILE NAME	.XX	SCALE : N/A	SIZE : A4
LI YONGFENG	10-25-08		0845-2D1A-BY_A.DWG	.XXX		PAGE : 2

bel COMPONENTS FOR A CONNECTED PLANET™

This document is electronically generated. This is a controlled copy if used internally

THE INFORMATION CONTAINED HEREIN IS CONSIDERED "PROPRIETARY" TO BEL FUSE INC. AND SHALL NOT BE COPIED, REPRODUCED OR DISCLOSED WITHOUT THE WRITTEN APPROVAL OF BEL FUSE INC.

RoHS 2002/95/EC

LED 1 POLARITY			LED 2 POLARITY		
PIN 27	PIN 28	COLOR	PIN 29	PIN 30	COLOR
+	−	YELLOW	+	−	GREEN

ELECTRICAL CHARACTERISTICS @ 25°C

TURNS RATIO

TP1	1CT : 1CT ±2%
TP2	1CT : 1CT ±2%
TP3	1CT : 1CT ±2%
TP4	1CT : 1CT ±2%

OCL @ 100kHz/100mVRMS

8mA DC BIAS (0°C − 70°C)	350µH MIN.

INS. LOSS

100KHz−100MHz	−1.2 dB MAX

RET. LOSS (MIN) @ 100OHMS ±15%

0.1MHz−40MHz	−18 dB
40MHz−100MHz	−12+20LOG(f/80MHz) dB

CM TO CM REJ

100KHz−100MHz	−30 dB MIN

CROSS TALK

1MHz−100MHz	−35 dB MIN

HIPOT (Isolation Voltage): 1500 Vrms

100% OF PRODUCTION TESTED TO COMPLY WITH IEEE 802.3 ISOLATION REQUIREMENTS.

LED 3 (Super bright)

VF (FORWARD VOLTAGE)	IF=20mA	YELLOW	2.1V TYP.
λD (DOMINANT WAVELENGTH)	IF=20mA	YELLOW	590nm TYP.

LED 4 (Super bright)

VF (FORWARD VOLTAGE)	IF=20mA	GREEN	2.2V TYP.
λD (DOMINANT WAVELENGTH)	IF=20mA	GREEN	565nm TYP.

SCHEMATIC FOR UPPER PORT(PORT 2)

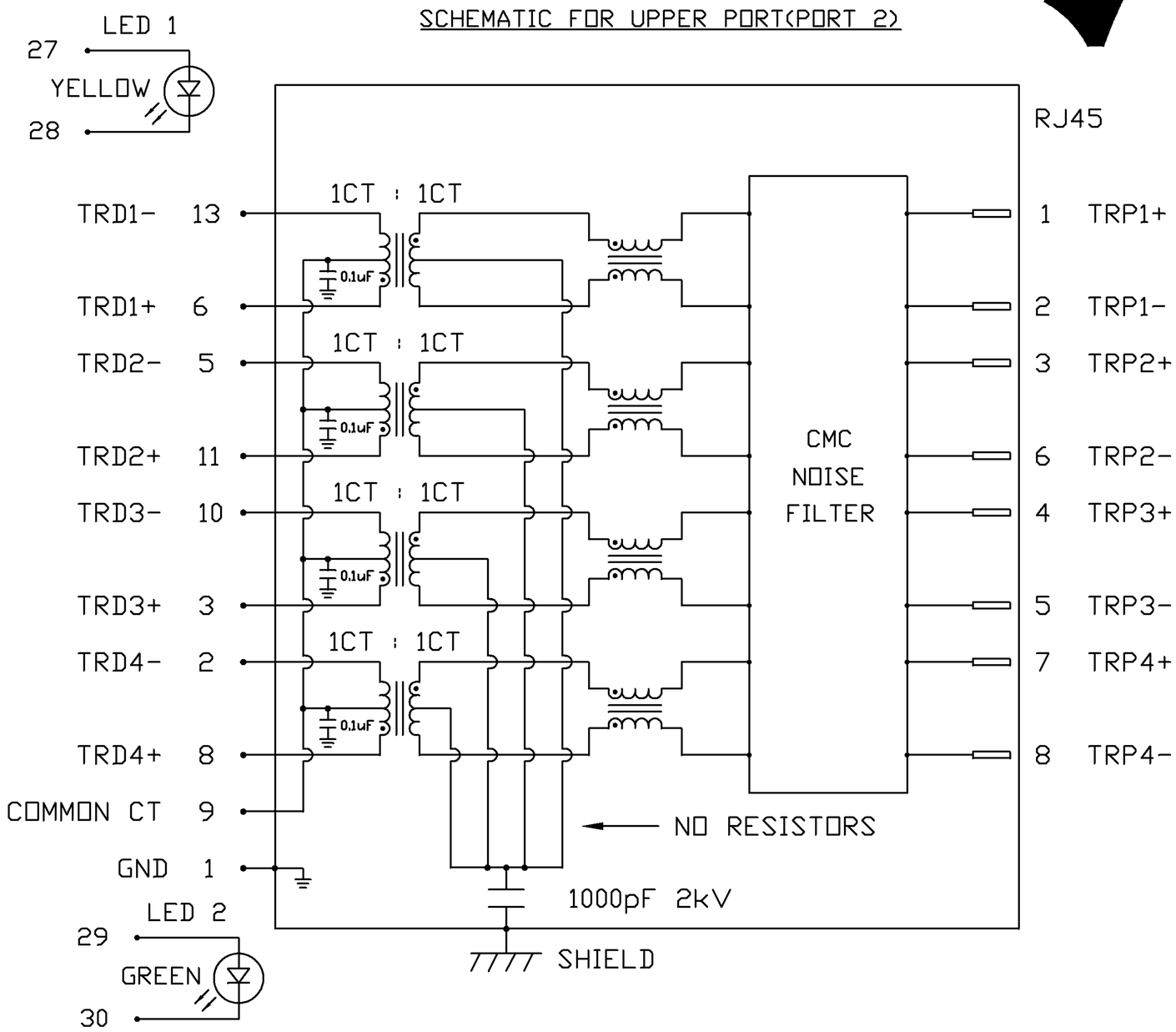

ORIGINATED BY	DATE	TITLE	PART NO. / DRAWING NO.	STANDARD DIM. TOL. IN INCH	[ ] METRIC DIM. AS REFERENCE
CHOW WANCHUNG	10-25-08	2X1 gigabit MagJack® (with LED)	0845-2D1A-BY	.X / .XX / .XXX	UNIT : INCH [mm] REV. : A
DRAWN BY	DATE		FILE NAME		SCALE : N/A SIZE : A4
LI YONGFENG	10-25-08		0845-2D1A-BY_A.DWG		PAGE : 3

bel COMPONENTS FOR A CONNECTED PLANET™

This document is electronically generated. This is a controlled copy if used internally

THE INFORMATION CONTAINED HEREIN IS CONSIDERED "PROPRIETARY" TO BEL FUSE INC. AND SHALL NOT BE COPIED, REPRODUCED OR DISCLOSED WITHOUT THE WRITTEN APPROVAL OF BEL FUSE INC.

RoHS 2002/95/EC

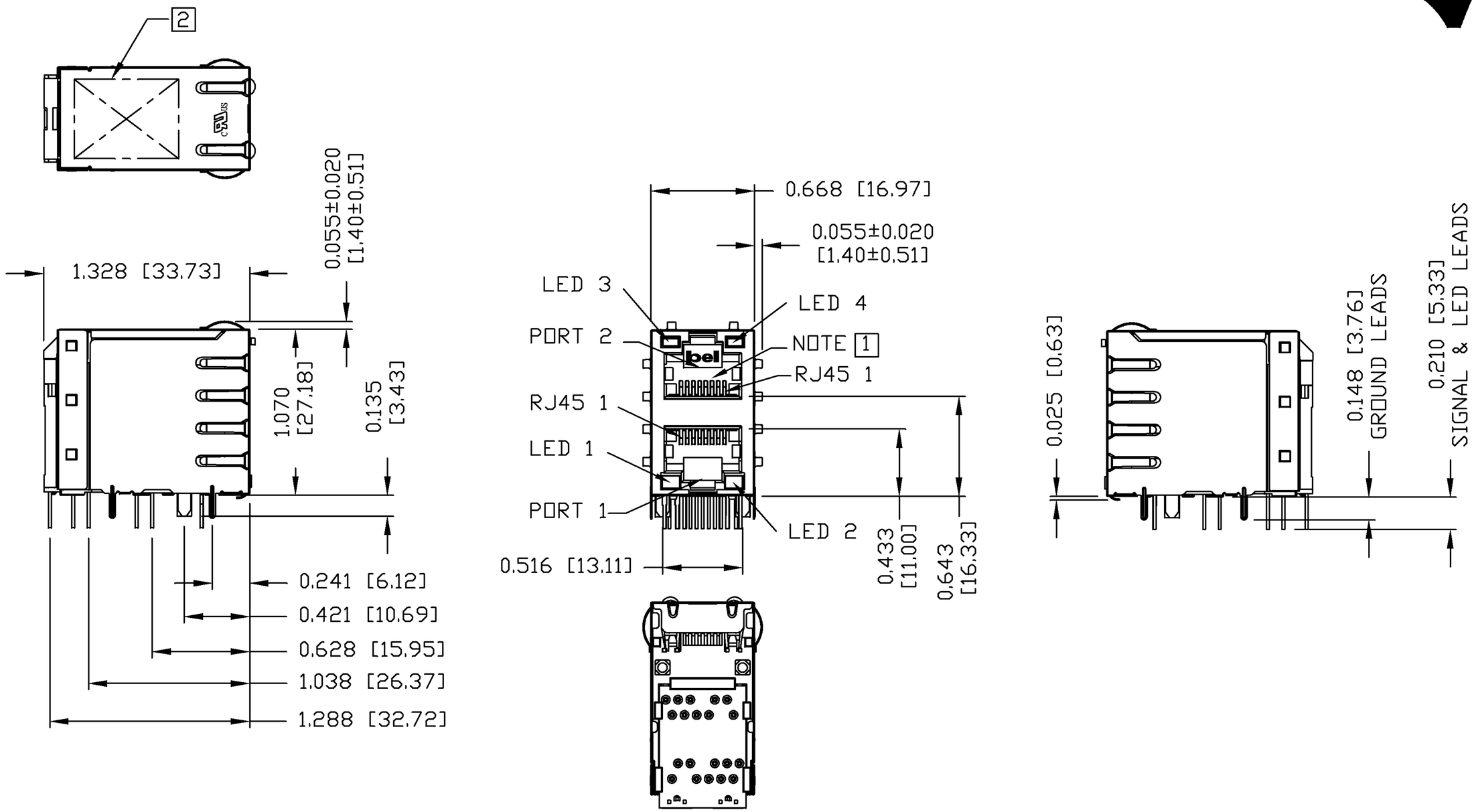

ORIGINATED BY	DATE	TITLE	PART NO. / DRAWING NO.	STANDARD DIM. TOL. IN INCH		[ ] METRIC DIM. AS REFERENCE	
CHRIS NG	10-25-08	2X1 gigabit MagJack® (with LED)	0845-2D1A-BY	.X		UNIT : INCH [mm]	REV. : A
DRAWN BY	DATE		FILE NAME	.XX		SCALE : N/A	SIZE : A4
LU XUEPING	10-25-08		0845-2D1A-BY_A.DWG	.XXX	±0.010		PAGE : 4

bel COMPONENTS FOR A CONNECTED PLANET

This document is electronically generated. This is a controlled copy if used internally

THE INFORMATION CONTAINED HEREIN IS CONSIDERED "PROPRIETARY" TO BEL FUSE INC. AND SHALL NOT BE COPIED, REPRODUCED OR DISCLOSED WITHOUT THE WRITTEN APPROVAL OF BEL FUSE INC.

RoHS 2002/95/EC

LED CONFIGURATION

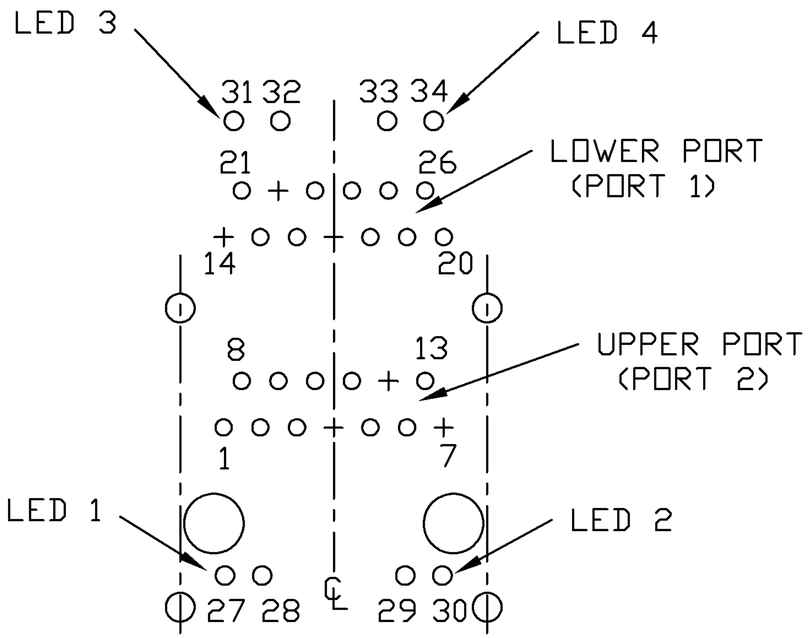

PIN-OUT INFORMATION

(COMPONENT SIDE VIEW)
(SCALE 2:1)

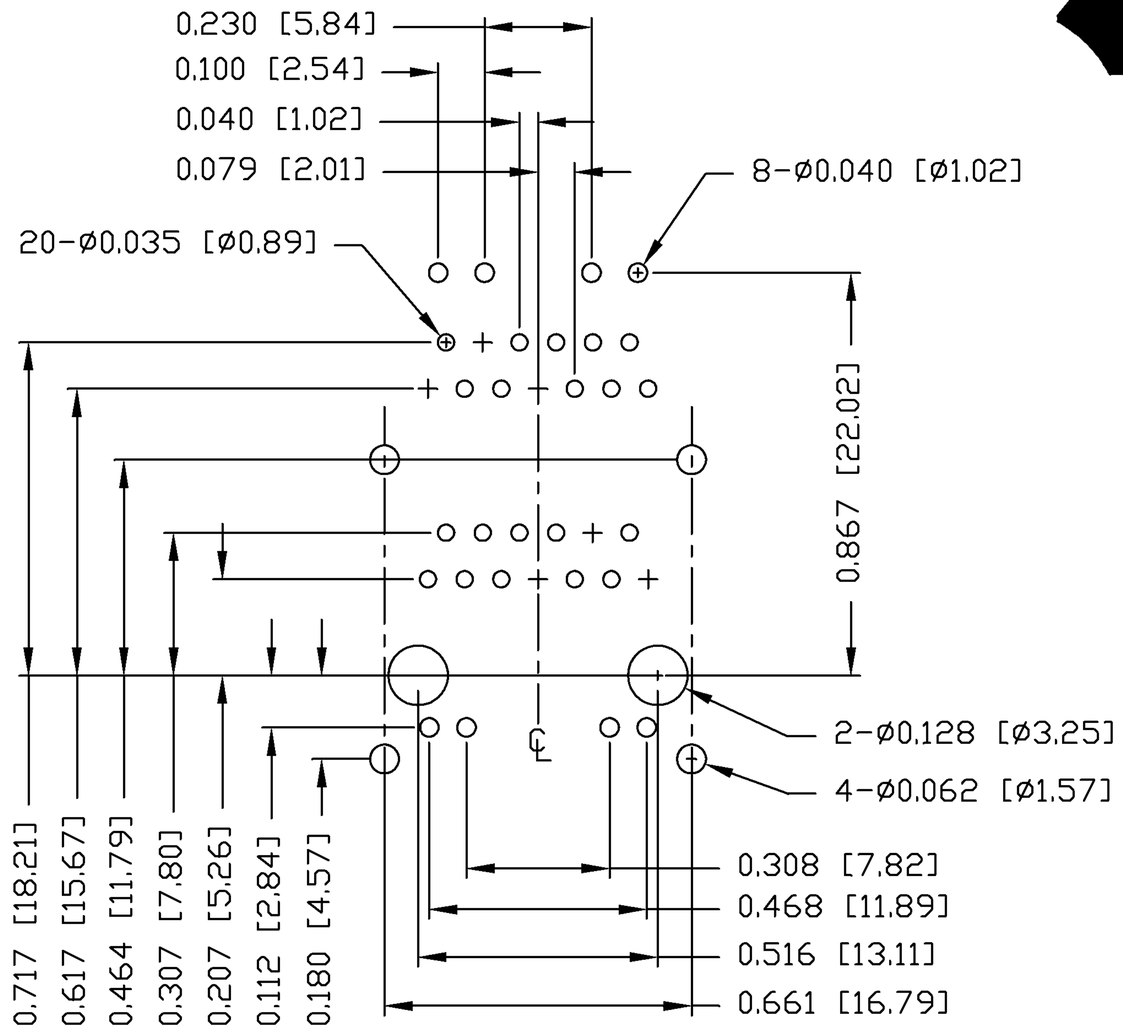

SUGGESTED FOOTPRINT

(COMPONENT SIDE VIEW)
(SCALE 2:1)

NOTES:

PLASTIC HOUSING: THERMOPLASTIC PBT
FLAMMABILITY RATING UL 94V-0
CONTACT PLATING: 50 MICRO-INCH HARD GOLD PLATING
OUTPUT PINS: TIN-COATED COPPER WIRE, DIA 0.018 INCH.
METAL SHIELD: NICKEL PLATED ON COPPER ALLOY.
(ALL GROUND LEADS ARE SOLDER DIPPED)

1. JACK CAVITY CONFORMS TO FCC RULES AND REGULATIONS, PART 68 SUBPART F.
2. MARK PART WITH MFG LOGO, MFG NAME, PART NUMBER, AND DATE CODE.

RoHS COMPLIANCE, PER EU DIRECTIVE 2002/95/EC.

c UL us UL RECOGNIZED - FILE #E196366 AND E169987.

ORIGINATED BY	DATE	TITLE	PART NO. / DRAWING NO.	STANDARD DIM. TOL. IN INCH		[ ] METRIC DIM. AS REFERENCE	
CHRIS NG	10-25-08	2X1 gigabit MagJack® (with LED)	0845-2D1A-BY	.X		UNIT : INCH [mm]	REV. : A
DRAWN BY	DATE		FILE NAME	.XX		SCALE : N/A	SIZE : A4
LU XUEPING	10-25-08		0845-2D1A-BY_A.DWG	.XXX	±0.004		PAGE : 5

bel COMPONENTS FOR A CONNECTED PLANET

This document is electronically generated. This is a controlled copy if used internally

THE INFORMATION CONTAINED HEREIN IS CONSIDERED "PROPRIETARY" TO BEL FUSE INC. AND SHALL NOT BE COPIED, REPRODUCED OR DISCLOSED WITHOUT THE WRITTEN APPROVAL OF BEL FUSE INC.

RoHS 2002/95/EC

SUGGESTED PANEL OPENING

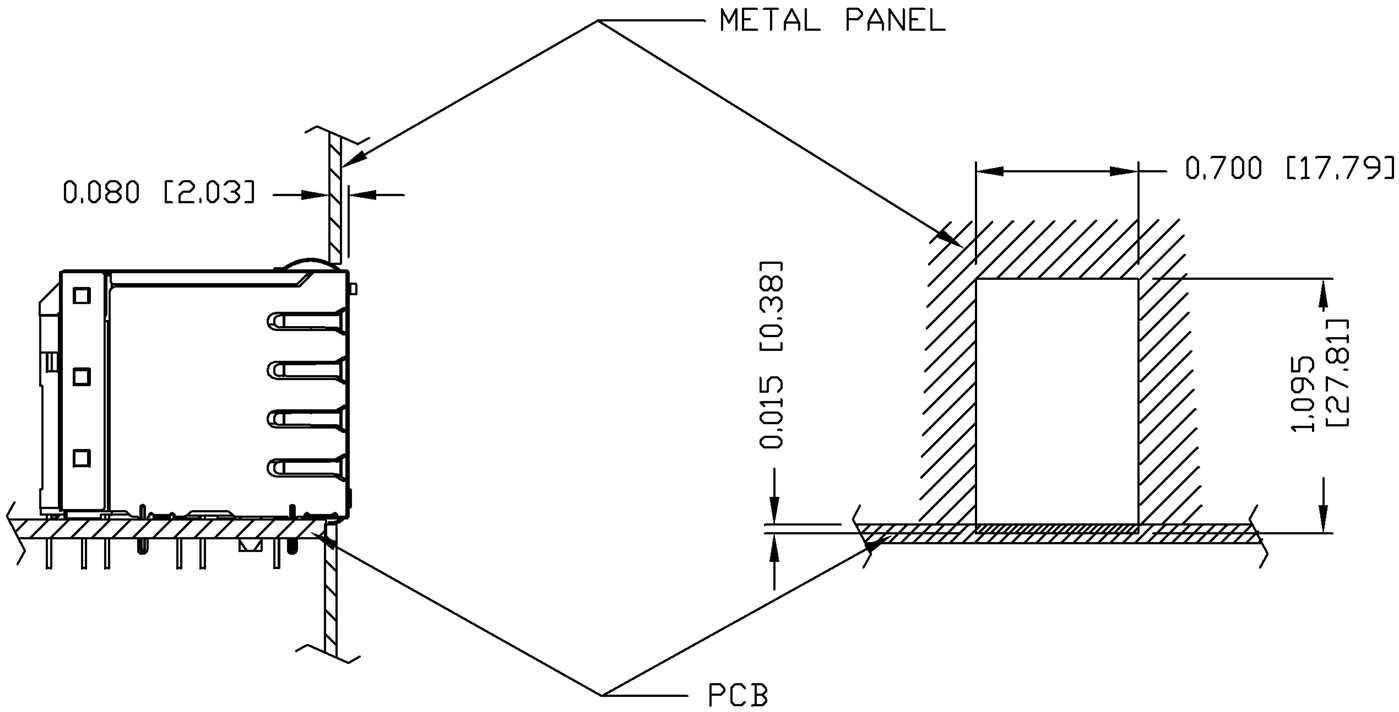

NOTE:

THE DISTANCE OF PANEL INSIDE SURFACE RELATIVE TO FRONT SURFACE OF PART IS ONLY A SUGGESTION.

IN CASE THIS DISTANCE IS DIFFERENT, THE REQUIRED PANEL OPENING DIMENSIONS CHANGE ACCORDINGLY.

PACKING INFORMATION

PACKING TRAY: 0200-9999-H5 (TOP)
0200-9999-H6 (BOTTOM)

PACKING QUANTITY: 40 PCS FINISHED GOODS PER TRAY
6 TRAYS (240 PCS FINISHED GOODS) PER CARTON BOX.

NOTE: CARDBOARD ARE PLACED BETWEEN LAYERS OF PACKING TRAY INSIDE CARTON BOX.
(INCLUDE THE UPPERMOST AND LOWEREST TRAY)

ORIGINATED BY	DATE	TITLE	PART NO. / DRAWING NO.	STANDARD DIM. TOL. IN INCH		[ ] METRIC DIM. AS REFERENCE	
CHRIS NG	10-25-08	2X1 gigabit MagJack® (with LED)	0845-2D1A-BY	.X		UNIT : INCH [mm]	REV. : A
DRAWN BY	DATE		FILE NAME	.XX		SCALE : N/A	SIZE : A4
LU XUEPING	10-25-08		0845-2D1A-BY_A.DWG	.XXX	±0.004		PAGE : 6

bel COMPONENTS FOR A CONNECTED PLANET

This document is electronically generated. This is a controlled copy if used internally